Super Washer

Model: 826

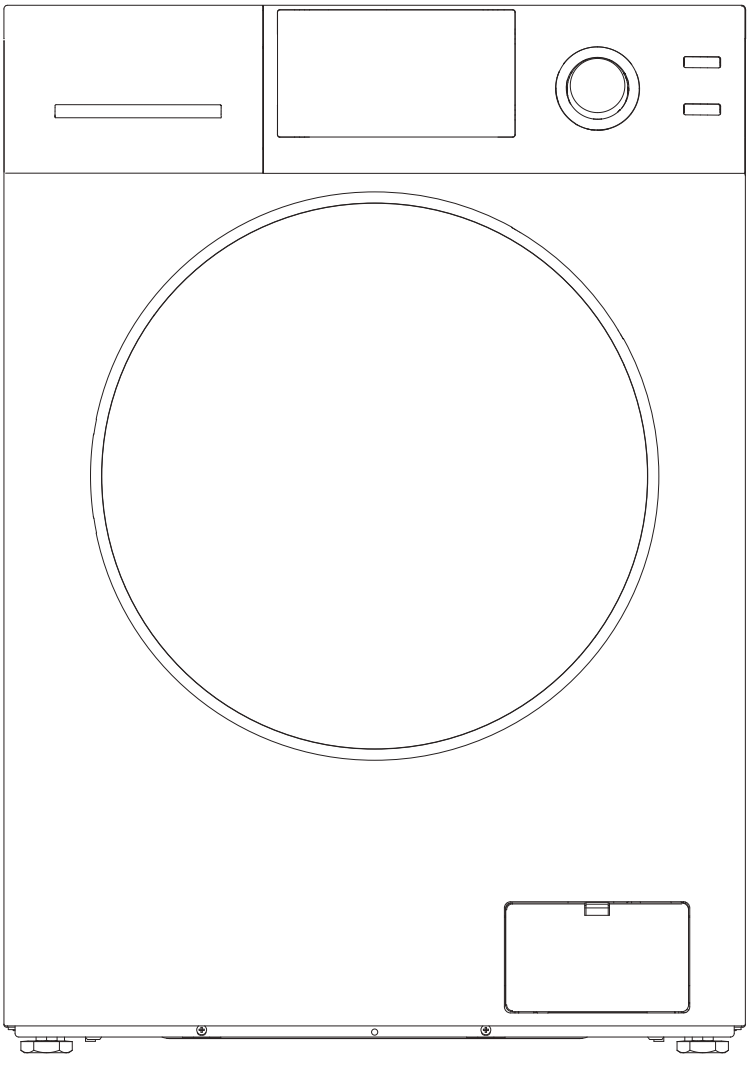

OWNER'S MANUAL

Read the instructions carefully and keep for future reference. Information maybe updated from time to time so please refer to the website for the latest version of the manual.

STOP

DO NOT RETURN TO STORE!

HAVE QUESTIONS OR NEED SERVICE?

CALL NOW **1-800-776-3538** **Service@ApplianceDesk.com**

TABLE OF CONTENTS

Please read the Owner's Manual carefully before using your Fully Automatic Washer

Introduction 1
Warranty 2
Exclusions 3
Technical Data 4
Important Safety Instructions 5
Helpful Hints 6
Pre-installation 6
Diagram of the Washer 7
Installation Instructions 8
Unpacking and Leveling 9
Electrical 10
Plumbing 11
Built-In, Recessed, Closet, Alcove Installation 12
Program Selection Chart 13
Operating Instructions 14
Control Panel 15
Display Panel 16
Useful Tips & Understanding Fabric Care Label 17
Maintenance 18
Stain Removal Chart 21
Troubleshooting 23
Diagnostic Menu 24

INTRODUCTION

Congratulations on your new Super Washer! In addition to its contemporary design, this is a highly sophisticated engineered product that will give you many years of satisfaction.

Here are some of the best reasons for buying your Super Washer

1. Easy Operation

This appliance is simple to use as a washer.

2. Efficient Operation

With a high spin speed of 1400 rpm, more water is extracted, allowing shorter dry times.

3. Convenience

This appliance can be permanently installed and be made portable with the installation of the portability kit (sold separately) where needed.

4. Placement Options

The Washer's sleek design makes it a perfect appliance for any kitchen or laundry room. Its compact size makes the Washer perfect for placement on each floor of your home.

5. Better Clothing Appearance

This Washer has no agitator to damage your clothes so they look better and last longer.

6. Water Savings

This appliance uses very little water for washing and far less than a standard full size top-loading washer. A new feature introduced is automatic water level which helps in saving water as it automatically decides the water intake depending on the quantity of your clothes.

7. Energy Savings

This appliance is engineered to provide valuable energy savings when compared to other washers

8. Maintenance

Since the machine has a self-cleaning pump, this appliance needs no cleaning of lint after every washing. Instead, there is a convenient coin trap which only needs to be cleaned every few months.

9. Space Savings

The washer is of optimum size thus saving previous space around your home.

10. Add a sock

In this feature, the program can be stopped at any time to add forgotten items to the wash. Press PAUSE for 5 seconds. Door will open after draining water so that it does not overflow. Load clothes. Close door. Press the START button. Washer will continue from the point it stopped.

WARRANTY INFORMATION

Your appliance is protected by this warranty under normal, personal, family or household use for 1 Year Parts & Labor and limited commercial use (90 days) in USA and Canada.

WARRANTY

Consolidated Brands undertakes to the consumer/owner to repair or, at our option, to replace any part of this product which proves to be defective in workmanship or material under normal personal, family or household use in USA and Canada, for a period of one years parts & labor from the date of original purchase. For commercial use, the product is warranted for a period of 90 days.

During this period, we will provide all labor and parts necessary to correct such defect, free of charge, if the appliance has been installed and operated in accordance with the written instructions provided with the appliance. Ready access to the appliance, for service, is the responsibility of the consumer/owner. If unit installed in closet or cabinet, it should be removed for access by service technician. If this cannot be done, then there will be extra charge.

We may require return of products or parts to our warranty department for which the shipping charges are to be incurred by the consumer. If a return or replacement is required, allow 3-4 weeks to process. If unit is located more than 25 miles there will be a trip charge. If unit is in remote area more than 75 miles, customer will need to take the product to the technician's workshop. Replacement unit will be delivered with curb side delivery only. If Unit is installed in a 5th wheel RV, in a location behind the axle it won't be covered under warranty.

All repairs or replacements are warranted only for the remainder of the original warranty period. Charges may incur if warranty coverage is not applicable. Service would be provided from Monday to Friday between normal business hours.

GENERAL

Since it is the responsibility of the consumer/owner to establish the warranty period by verifying the original purchase date, Consolidated Brands recommends that a receipt, delivery slip or some other appropriate payment record be kept for that purpose. This warranty gives you specific legal rights, and you may also have other rights which vary from State to State.

You can register your Warranty by either of the following methods:

1. Scan Chat-AI

- Open Smart Phone
- Open Camera
- Click the Link

Chat-AI

2. Register online at ApplianceDesk.com/Warranty
3. Chat-AI is also used to obtain Product Information, Manuals and Updates

WARRANTY SERVICE

This warranty is given by:
Consolidated Brands
10222 Georgibelle Drive, Suite 200,
Houston, TX 77043-5249

QUESTIONS / SERVICE
Phone/Text: 1-800-776-3538
Email: Service@ApplianceDesk.com
Web: www.ApplianceDesk.com

EXCLUSIONS

In no event shall Consolidated Brands be liable for incidental or consequential damages or for damages resulting from external causes such as abuse, operation misuse, neglect, alterations, normal wear and tear, incorrect voltage or acts of God. This warranty does not cover service calls which involve defective workmanship, damage due to other products while combined use with this product or materials covered by this warranty. Accordingly, diagnosis and repair costs for a service call which involves defective workmanship or materials will be the responsibility of the consumer-owner.

Most work is covered. The defining factor is has the machine malfunctioned (Consolidated Brands is responsible) or has the customer omitted or done something to cause malfunction (customer is responsible).

THE FOLLOWING WORK ARE NOT COVERED UNDER WARRANTY:

Installation

1. Non-removal of shipping bolts, causing vibration / internal damage.
2. Non-adjustment of feet to level machine, causing vibration / internal damage.
3. Non-removal of exhaust vent plate at the back while using Venting Dry mode, causing excess heat and resulting in damage to internal components.
4. Using incorrect length of venting i.e. more than 10 feet unless used with a booster fan.
5. Not conforming to minimum space requirements for built-in installation, causing excess heat and resulting in damage to internal components.
6. Installation in a corrosive environment.
7. Incorrect water pressure i.e below 7.25 psi or above 145 psi
8. Incorrect water inlet hose installation (use only factory supplied hoses with metric threads on the L shaped side to fit water valve)

Maintenance

1. Non-cleaning of coin trap for debris, causing the unit to not drain out water and resulting in drain pump malfunction.
2. Non-cleaning of vent fan & exhaust hose for lint, causing the unit to not dry properly.
3. Improper maintenance (such as, but not limited to, scale build-up, freeze damage, or vent blockage).

Damage

1. Breakage of cosmetic parts e.g., door handle, knob.

Other

1. Accident, abuse or misuse.
2. Using solvents to clean the machine or wash clothes, causing damage.
3. Misapplication of this product e.g., use in a non household/commercial environment.
4. Any other cause not due to defects in materials or workmanship.
5. Problems or damage due to fires, flooding, electrical surges, freezing or any acts of God.
6. Any damage caused by poor water quality.
7. Operating the appliance with anything other than potable water at all times.
8. Force majeure.

Warranty Limitations

1. If a unit is located more than 25 miles away, there will be a trip charge.

2. If a unit is in a remote area more than 75 miles away, the machine should be taken to the technician's workshop.

3. If the unit is installed in a 5th wheel RV, in a location behind the axle, it will not be covered under warranty.

4. All repairs or replacements are warranted only for the remainder of the original warranty period.

5. If a return or replacement is required, allow 3-4 weeks to process.

6. Replacement units will be delivered with curbside delivery only.

7. We may require the return of products or parts to our warranty department for which the shipping charges are to be pre-paid by the consumer / owner.

8. Charges may be incurred if warranty coverage is not applicable.

9. Service would be provided from Monday to Friday between normal business hours.

All rights reserved. Manual subject to change without notice.

California Proposition 65

WARNING: This product contains chemical known to the State of California to cause cancer and birth defects or other reproductive harm.

TECHNICAL DATA

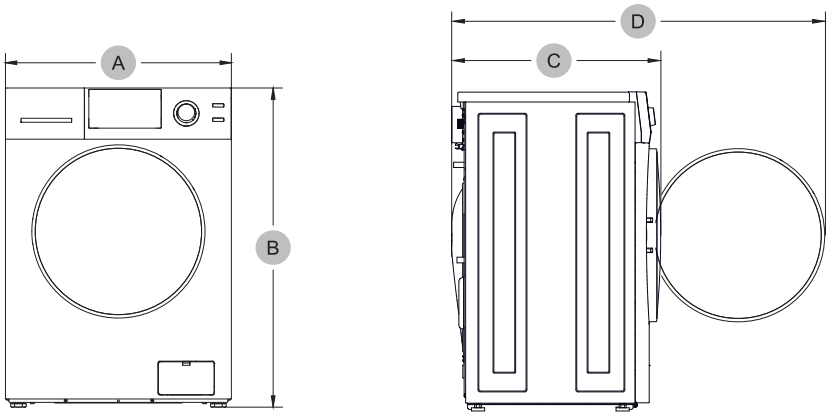

Type		Front loading washing machine
Model		**826**
Dimensions (inches/mm)	A. Width	23.6/600
	B. Height-overall	33.5/850
	C. Depth	21.85/555
	D. Depth with door open	38.54/979
Rated voltage		110-120V/60Hz 10A
Water pressure (psi/Mpa)		7.25 - 145 / 0.05- 1.00
Wash capacity (lb/kg)		15 / 6.8
Net weight (lb/kg)		152 / 69
Spin revolution (rpm)		Max. 1,400
Power consumption (W)	Washing	150
	Spin	500
	Wash heater	1,000

Intertek

4007606

Electrical Testing Laboratories

US **N°** 4007606 **CANADA**

The ETL Listed Mark is the legal equivalent to the UL and CSA Listed Marks

Note: All rights reserved.
Designs, Specifications and Manual subject to change without notice

IMPORTANT SAFETY INSTRUCTIONS

Your washing machine has been built in compliance with safety regulations, to protect you and all your family.

WARNING – To reduce the risk of fire, electric shock, or injury to persons when using your appliance, follow basic precautions, including the following:

1. Read all instructions before using the appliance.
2. Do not wash articles that have been previously cleaned in, washed in, or spotted with gasoline, other flammable or explosive substances, as they emit vapors that could ignite or explode.
3. Do not allow children to play on or in the appliance. Close supervision of children is necessary when the appliance is used near children.
4. Before the appliance is removed from service or discarded, remove the door.
5. Do not reach into the appliance if the tub or drum is moving.
6. Do not install or store this appliance where it will be exposed to the weather.
7. Do not tamper with controls.
8. Do not repair or replace any part of the appliance or attempt any servicing unless specifically recommended in the user-maintenance instructions or in published user-repair instructions that you understand and have skills to carry out.
9. Do not add gasoline, dry-cleaning solvents, or other flammable or explosive substances to the wash water. These substances give off vapors that could ignite or explode.
10. Under certain conditions, hydrogen gas may be produced in a hot water system that has not been used for 2 weeks or more. **HYDROGEN GAS IS EXPLOSIVE.** If the hot water system has not been used for such a period, before using the washer, turn on all hot water faucets and let the water flow from each for several minutes. This will release any accumulated Hydrogen.
11. Do not use fabric softeners or products to reduce static unless recommended by the manufacturers of the fabric softener product
12. Check the Coin Trap every few months to remove any coins, buttons or similar size objects.

SAVE THESE INSTRUCTIONS

SAFETY

CAUTION

RISK OF ELECTRIC SHOCK
DO NOT OPEN

CAUTION: TO REDUCE THE RISK OF ELECTRIC SHOCK, DO NOT REMOVE COVER (OR BACK). NO USER SERVICEABLE PARTS INSIDE. REFER SERVICING TO QUALIFIED SERVICE PROFESSIONALS.

The model number and the serial number are on the label affixed to the back of the unit. These numbers are also available on the front of the cabinet behind the door.

You should note the model and serial numbers of this unit in the space provided. Retain this booklet as a permanent record of your purchase to aid in identification in the event of theft.

MODEL#_____

SERIAL#_____

HELPFUL HINTS

1. Your Washer spins at a high 1200 rpm spin speed, which will extract more water especially from absorbent fabrics and reduce the degree of dampness. This will cut down on your drying time.

2. **FABRIC SOFTENER:** After the wash cycle, the clothes can get stuck to the sides of the drum. USING LIQUID FABRIC SOFTENER WILL CAUSE THE CLOTHES TO UNSTICK IMMEDIATELY AND REDUCE WRINKLES.

PRE-INSTALLATION

1. The unit must be installed on a strong leveled surface in a protected, dry and well-ventilated area, with a power and water supply of sufficient capacity and a sufficient outlet in close proximity.

2. Installation on Carpet or Wood increases vibrations.
   - Carpets – place on light carpet only.
   - Wood – brace floor with screws and place additional sheets of plywood before installation.

3. This unit's installation and grounding should be done in accordance with local codes by a qualified installer. "Installation Instructions" are included in this manual for the Installer's reference.

4. The unit should be plugged into a properly grounded three (3) prong electrical outlet of 110V/60Hz with minimum 15 Amps, It should not be controlled by a wall switch or pull cord which might be turned off accidentally.

DIAGRAM OF THE FULLY AUTOMATIC WASHER

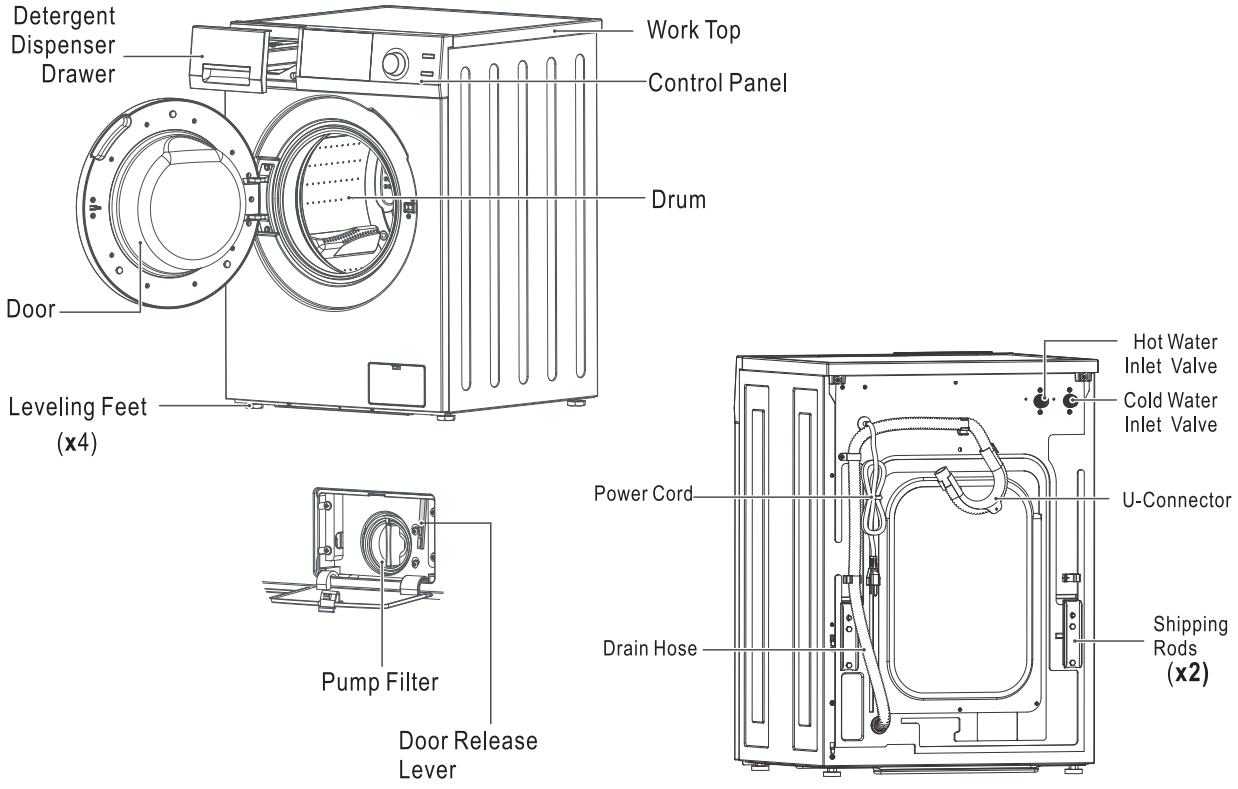

Factory supplied accessories

Cold/Hot water hoses

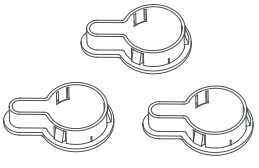

Blanking Caps - 3
(To cover shipping bolts hole)

NOTE

- Contact Customer Service if any accessories are missing.
- For your safety and for extended product life, use only authorized components. The manufacturer is not responsible for product malfunction or accidents caused by the use of separately purchased unauthorized components or parts.
- The images in this guide may be different from the actual components and accessories, and are subject to change by the manufacturer without prior notice for product improvement purposes.

INSTALLATION INSTRUCTIONS

Handling

Please handle the machine carefully and use appropriate means while lifting and moving the machine so that it does not get damaged. Do not drag the machine to your floor and, or, to the machine. Do not hold on to protruding parts when lifting

Disposing of the packing

The shipping package has protected your new washing machine on its way to your home. All packaging materials are non-poliituing and recyclable. Please contribute to a better environment by disposing of packing material in an environmentally conscious manner.

⚠ DANGER ⚠

Keep children away from the shipping cartoon and packing components. Danger suffocation from plastic foil and folding cartons.

Disposing of your old appliance

Old Appliances are not worthless trash! Valuable raw material can be recycled from old appliances. To prevent children from locking themselves in the appliances, disable the door locking or remove the door.

Factory - supplied Equipment

Inside the drum there is a packet of accessory parts supplied with your washer. Check that all the accessory parts supplied for your model are there. If any parts are missing contact your dealer.

Any residual moisture inside the drum is due to the final testing which every washing machine undergoes before leaving the factory.

Installation area

⚠ DANGER ⚠

Appliance stability is very important otherwise washing machine could “wander” during the spin cycles.

The installation area must be solid and even. Soft floor surfaces such as carpets or surfaces with foam backing are not suitable.

⚠ DANGER ⚠

Do not install the washing machine outdoor or in an area exposed to freezing condition. frozen hoses can tear / burst.

If the washing machine is located in a room which will be exposed to temperatures below freezing point, or if it is located in a cabin that is being shutdown for the winter, any residual water in the pump or water inlet hoses must be drained.

Removing the shipping rods

⚠ CAUTION ⚠

The shipping rods must be removed before using the appliance for the first time and must be retained for any future transport.
(e.g when moving)

UNPACKING, LEVELING & POSITIONING

Remove the packing and check that the Washer is undamaged. If you have any doubt, do not use the Washer and call Customer Service. Keep all packing parts (plastic bag, foam rubber, screws, etc.) out of the reach of children since they could be dangerous.

Important: The inside of the Washer consists of a free floating drum that is affixed with shipping rods at the back of the cabinet during transport (Fig.1). The power cord can be accessed by removing the shipping rods (Fig. 2 & 3). Close the holes left open by the rods with the caps provided (Fig. 4). The screws also need to be reinstalled (Fig. 4).

It is important for the machine to be perfectly level. For this reason, the machine is fitted with adjustable feet used for leveling the machine before use (Fig. 5).

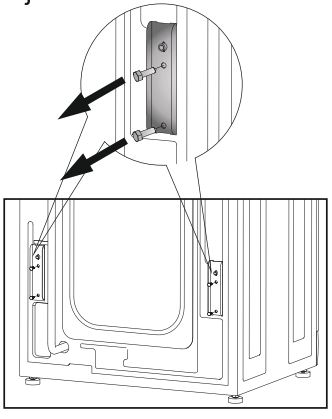

Fig.1

Fig.2

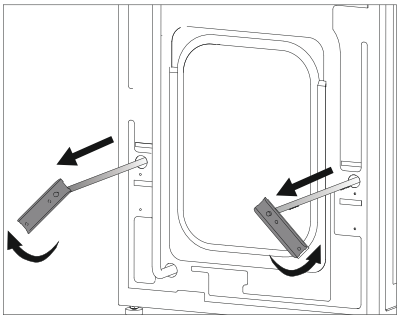

Fig.3

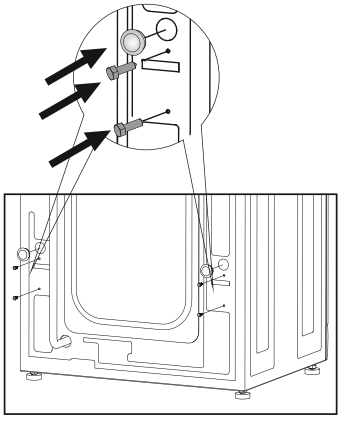

Fig.4

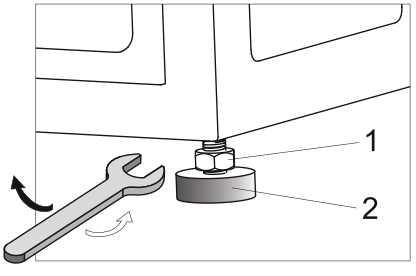

Fig. 5

NOTE

- Save the bolt assemblies for future use. To prevent damage to internal components, DO NOT transport the washer-dryer combo without reinstalling the shipping bolts.
- Failure to remove shipping bolts and retainers may cause severe vibration and noise, which can lead to permanent damage to the combo.
- The cord is secured to the back of the combo by a clamp with a shipping bolt to help prevent operation with shipping bolts in place.

CONNECTION

Connect the plug to a power outlet - 110V / 60Hz with minimum 15 Amps. Make sure that the voltage and frequency available correspond with those stated on the serial number plate located on the machine. Do not use adaptors or extension cords since they could result in overheating and burn out.

POWER SUPPLY

This Super Washer must be connected to an individual circuit identical to the one specified on the rating plate of the loading port protected by fuses or circuit breaker conforming to local codes.

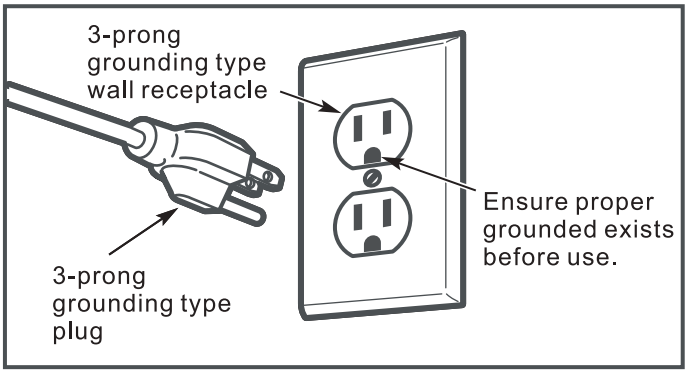

GROUNDING

This appliance must be grounded. In the event of malfunction or breakdown, grounding will reduce the risk of electric shock by providing a path of least resistance for electric current. This appliance is equipped with a power cord having an equipment-grounding conductor and a grounding plug. The plug must be plugged into an appropriate outlet that is properly installed and grounded in accordance with all local codes and ordinances.

WARNINGS

- Improper connection of the equipment-grounding conductor can result in a risk of electric shock. Check with a qualified or service representative or personnel if you are in doubt as to whether the appliance is properly grounded.
- Do not modify the plug provided with the appliance: if it will not fit the outlet, have a proper outlet installed by a qualified electrician.

Note: If the electrical power supply does not meet the specifications listed above, please call a licensed electrician.

CONNECTING TO THE WATER FAUCET

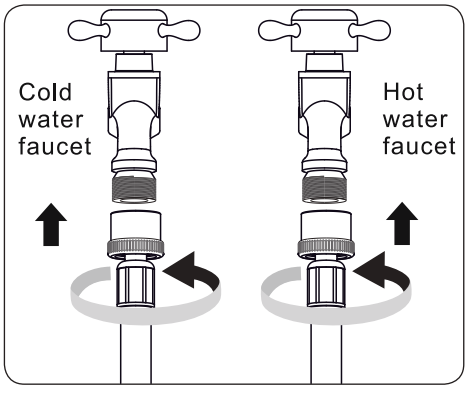

Fig.6

To connect the hoses to the water faucets:

- Connect the straight end of each hose to the cold or hot faucet.
- Turn the fittings by hand until they are tight, and then tighten them by just an additional two-thirds of a turn with a plier. Do not overtighten the fittings. They can be damaged.
- When done, pull the water hoses up and down to check if they are properly connected.

CONNECTING TO THE MACHINE

To connect the hoses to the machine:

- Connect the L-shaped end of each hose to the cold or hot water valve on the rear of machine.
- Open both the faucets, and check if there is a leak.

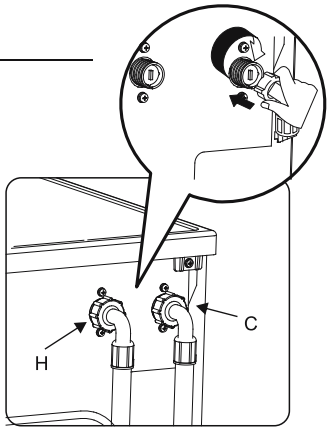

Fig.7

CONNECTING THE DRAIN HOSE

Connect the drain hose to a drain duct (with internal diameter of at least 1.6 inches) or place it for drainage in to a sink or a tub, ensuring that there are no kinks or bends. The free end must be at a height of 24”- 40” from the floor. The hose can be held in place using the white plastic clamp on the upper part of the back panel.

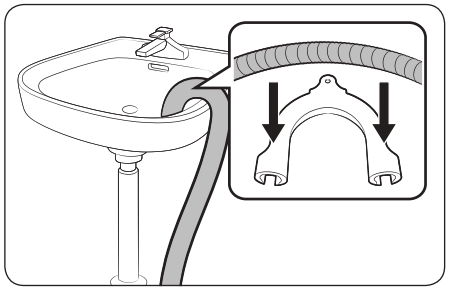

Fig.8

Height difference between the installation location of the washing machine and the drainage point: Minimum 24", and Maximum 40".

- Attach water drain hose to hose guide.
- Hook the hose guide over the side or standpipe (Fig.8).
- When the water is being drained, check that the water flow out of the hose is adequate.

SPECIAL INSTALLATION REQUIREMENTS

MINIMUM CLEARANCE OTHER THAN ALCOVE OR CLOSET INSTALATION

Minimum clearances to combustible surfaces: 2" (5 cm) clearance both sides and 3" (7.5 cm) rear.

BUILT-IN, RECESSED, CLOSET AND ALCOVE INSTALLATION

The Super Washer may be installed in a built-in, recessed area, closet or alcove.
The installation spacing is in inches and is the minimum acceptable.
Other installations must use the minimum dimensions indicated.
Minimum clearance between dryer cabinet and adjacent walls are: 2" either side and 3" front and rear.
Minimum vertical space from floor to overhead cabinets, etc. is 52" (132 cm).
Closet door must be louvered or otherwise ventilated and must contain a minimum of 60 sq. in. of open area equally distributed. If this closet contains both washer and a dryer, doors must contain a minimum 120 sq. in. of open area equally distributed.
No other fuel-burning appliance shall be installed in the same closet with dryer.

★ Additional clearances for wall, door and floor molding may be required.

NOTE: If a door is installed that potentially encloses the unit while running, the door must allow for a minimum of 20 sq. in. of air free movement. There must also be a 1" additional space in front of the unit to the closed door and 1" from the back of the unit to the wall. Additional spacing should be considered for easy installation, servicing and compliance with all applicable local, state and federal codes.

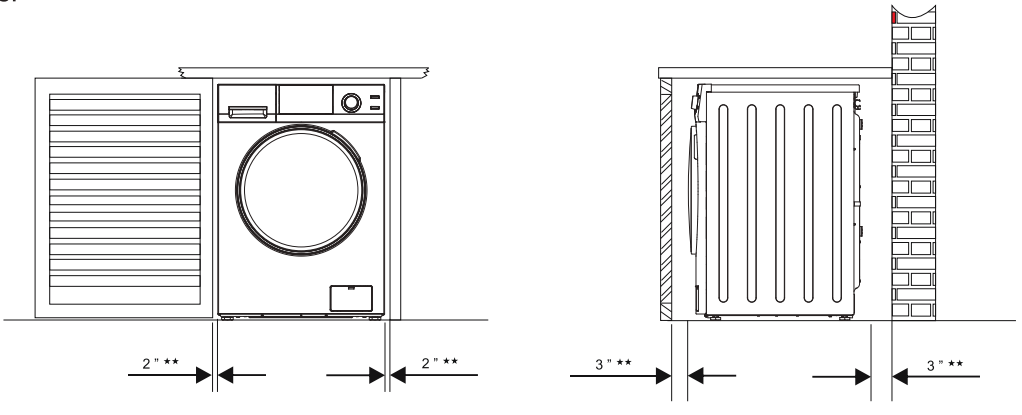

Fig.10

ADA COMPLIANCE

Fig.11

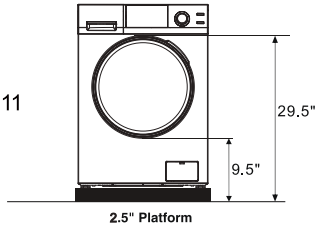

Use 2.5” height platform to make the machine ADA compliant.

PROGRAM SELECTION CHART

WASH CYCLES

Wash Programs	Description of Load	Wash Features Water Temp/Spin rpm	Approx Time
1. NORMAL	Mixed clothes (shirts, pants, etc.)	Warm / 1200	51 mins
2. Prewash+Heavy	Thick cottons (towels, jeans)	Cold +Hot / 1400	75 mins
3. Heavy	Mixed cottons (t-shirts, jeans)	Hot / 1400	51 mins
4. ECO	Cotton blends, light fabrics	Cold / 800	31 mins
5. Quick 20	Cotton blends, light fabrics	Cold / 1200	20 mins
6. Baby	Light fabrics	Warm / 800	41 mins
7. Delicate	Silk, Polyester, etc.	Cold / 800	36 mins
8. Wool	Woolens	Cold / 500	36 mins
9. Quiet 60	Mixed cottons	Cold / 800	31 mins
10. Sanitize 165	Bedsheets, etc.	Hot / 1200	69 mins
11. Allergen 131	Mixed Cottons	Hot / 1200	59 mins
12. PET Cycle	Mixed Cottons	Cold / 1200	36 mins

OTHER CYCLES:

Spin only - 12 minutes Spin cycle at Max. 1,000 RPM.

Self clean - 40 minutes cycle at 90° to clean the inner drum and tub of the machine.

Winterize - 2 minutes cycle to winterize your appliance.

PET Cycle - For cleaning pet hair - Please see important instructions on page 17.

The total working time will vary with the laundry size, water pressure, water temperature and ambient temperature etc.

OPERATING INSTRUCTIONS

1. Ensure the Washer is turned off. (Power Indicator light should be off).
2. Separate clothes by type, color and degree of soiling.
3. For small items use a mesh bag.
4. Load clothes of the selected type loosely into the drum. Ensure to put in a full load of clothes.
5. Close the Washer door. You will hear a click when it is correctly closed.

   Use High Efficiency (HE) detergent about 1 table spoon.
   Add detergent to Dispenser A.
   You can add fabric softener and pre-wash detergent as shown in the diagram to compartment B & C.

***Note**: The washer is designed to be used with a full and balanced load. If a small or half load of clothes is put in the washer, it will be unbalanced causing the drum to rotate slowly during the spin cycle and will not extract sufficient water. This will result in wet clothes at the end of the cycle and will not be ready to put in the dryer.*

Detergent Dispenser

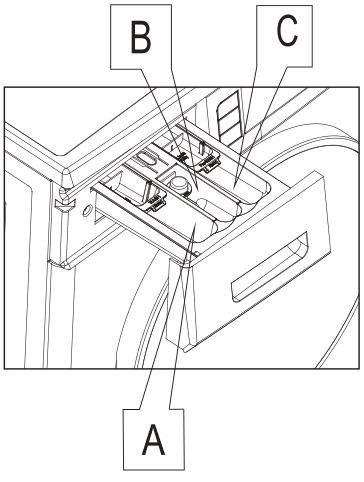

Fig. 12

Dispenser A:
Detergent for main wash

Dispenser B:
Fabric Softener

Dispenser C:
Detergent for pre-wash and bleach

The blue cups are only for liquid detergent.
Please do not add powder in these cups.

Note : concentrated fabric softener must be diluted with a little water before being poured into the dispenser
(This prevents the over flow siphon from getting blocked)

Your washer is designed to use a high efficiency (HE) detergent, which reduces or eliminates suds and results in more efficient washing.

WINTERIZING

How to winterize for cold weather

1) Pour 2 cups of RV type Antifreeze in soap dispenser.
2) Select WINTERIZE cycle on knob and press START. Machine will Rinse & Spin.
3) Open coin trap once cycle is finished and drain out remaining water.
4) Shut o ffwater at both faucets and disconnect water inlet hoses from faucets and drain.

CONTROL PANEL

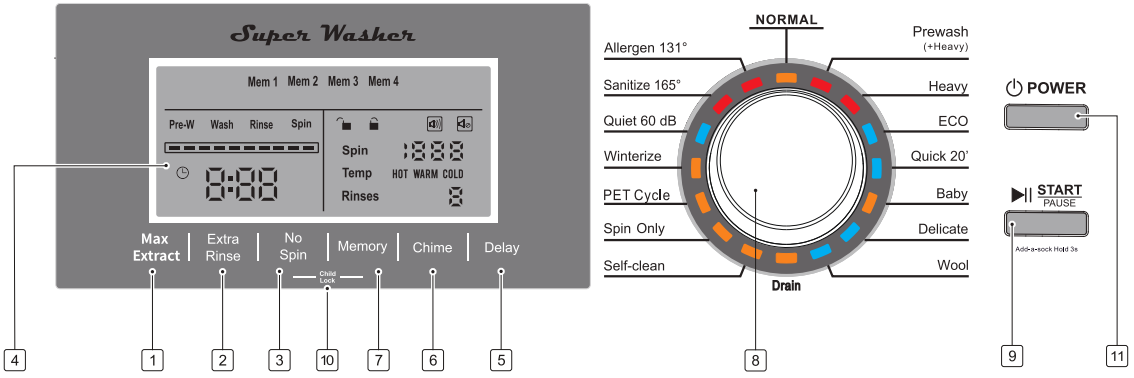

Buttons Introduction

1	Max Extract	To extend the duration of final spin cycle by 30%.
2	Extra Rinse	Press this selection button to add once more rinse cycle to the selected wash program.
3	No Spin	If you want to soak your clothes before the spin cycle, press this button to eliminate the spin function. This will keep the clothes in the rinse water after the last rinse cycle is finished. After the desired soak time, press this button again and the water will drain out and proceed to the last spin cycle.
4	Color LED Display	Displays the selected program, such as the water temperature, spin speed, remaining time, rinse times, water level and error messages.
5	Delay Start button	To delay the start of the wash cycle, touch this button to select the delay time from 1 to 24 hours. Each time the Delay button is pressed, the time increases in one-hour increments. The delay time will show on the Display Panel. Then press Start and the cycle will start after the selected delay time has elapsed.
6	Chime button	Press this button to turn on, or turn o ffthe chime before you start the washing cycle.
7	Memory button	Press this button to select one of the four memory settings. Then select the your favorite wash cycles. Then press START/PAUSE button to run this program, and this program will be memorized. If you want to run the memorized program later, press this button to select desired program and then press START/PAUSE button.
8	Program Dial	Turn dial to point to one of the 16 programs depending on the load to select wash program.
9	Start/Pause button	Press this button to start or interrupt the selected wash program, or to view the program during a cycle.
10	Child Lock	In order to deactivate function to the controls, to prevent altering the wash cycle, press and hold No spin and Memory buttons for 5 seconds.
11	Power	Press this button to turn the machine on. Or hold down this button to turn it off.

Display Panel Symbols

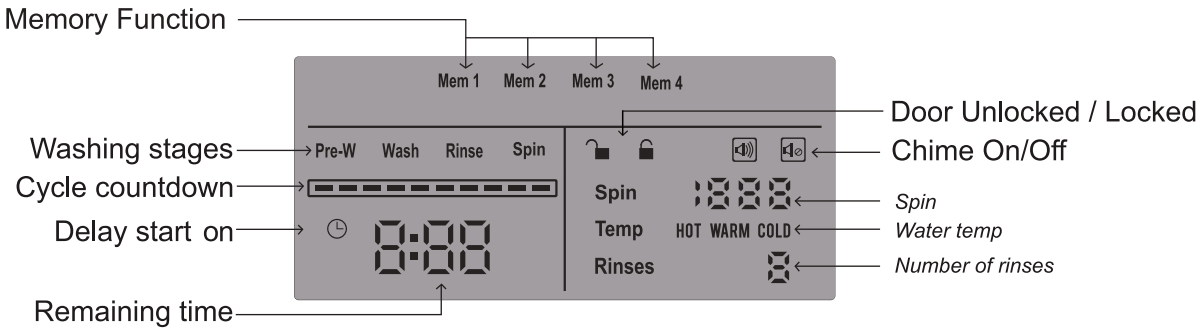

How to Run Wash cycle

1. Press POWER button
2. Press START

   Default cycle is NORMAL - If required, you can change to desired washing cycle based on type of clothes by rotating the Program Dial knob.

How to stop the wash cycle

- The wash program can be stopped at any time.
- PRESS START/PAUSE, rotate the knob to another program to cancel the current selected program.
- PRESS POWER button for 3 seconds to turn off the machine

How to turn on the display in energy saving mode

- Machine display gets turned off automatically during operations to save energy.
- Press any button to turn on display during this energy saving mode

Add-a-sock Feature

The wash program can be stopped at any time to add forgotten items to the laundry.

- PRESS START/PAUSE for 5 seconds.
- Door will open after draining water so that it does not overflow.
- Load clothes. Close door.
- Press START. The cycle will continue from the point it stopped

Door lock function

Pressing the START button will lock the door → . The wash cycle will start and will continue until the whole program is completed. The door will be locked and cannot be opened until the wash cycle ends. In a few minutes after the cycle ends, the door lock icon will change from locked to unlocked and then you can open the door easily.

Please do not try to force the door open. **Breakage of the door handle is not covered by warranty.**

PET Cycle

Before loading clothes and sheets into the appliance, remove as much pet hair as possible in order to prevent buildup and clogging of the drain pump. Wipe the surface of clothes and sheets with a lint roller or a damp rubber glove to easily remove pet hair.

After the end of the wash cycle, run a quick wash cycle without clothes. After the cycle ends, wipe down the drum with a damp cloth to collect any pet hair on the drum surface.

USEFUL TIPS

Denim Alert:
Some overalls have straps with hooks that can damage the drum of your washing machine or other garments during the wash. To minimize the risk, place hooks in the pocket and fasten with safety pins.

Vacations: unplug the appliance:
It is recommended that you should unplug the machine from the socket and turn off the water supply. Leave the door ajar to allow air circulation to the draw and the door gasket area. This will prevent unpleasant odors.

UNDERSTANDING FABRIC CARE LABELS

The symbols on labels of your garments will help you in choosing the suitable wash program, the right temperature, wash cycles, and ironing methods. Please review the chart below.

Energetic wash Delicate wash	Max. wash temperature 95°C	Max. wash temperature 60°C	Max. wash temperature 40°C	Max. wash temperature 30°C	Hand wash	DO NOT wash at all
Bleaching	Bleach in cold water			DO NOT bleach		
Ironing	Hot iron max. 200°C	Warm iron max. 150°C		Lukewarm iron max. 110°C	DO NOT iron	
Dry cleaning	Dry cleaning in all solvents	Dry cleaning in perchlorethylene, petrol, pure alcohol, R 111 & R 113		Dry cleaning in petrol, pure alcohol and R 113	DO NOT dry clean	
Drying	Flat	On the line	On clothes hanger	High temperature Low temperature Tumble dry	DO NOT tumble dry	

Your Washer has been designed to operate with easy maintenance.
Follow these simple maintenance procedures to obtain optimum performance:

1. Ensure that your machine was installed according to the correct installation procedures detailed in this Manual.
2. Do not use solvents either to clean the machine or to wash clothes.
3. Keep the inside of the detergent dispenser clean.

Cleaning the coin trap

- Switch off the Washer, allow the water to cool down.
- Open the service flap by using a finger. (bottom right corner) (Fig.13)
- Turn the pump filter open to the left. (Fig.14)
- Remove foreign objects/fluff from inside and clean the interior. (Fig.15)
- The pump impeller wheel located behind the water filter, must be able to rotate.
  Remove detergent residue and fluff from the pump cover thread and pump housing.
- Insert the coin-trap cover and screw tight, close the service flap. (Fig.16)

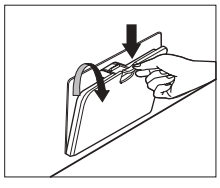
Fig.13

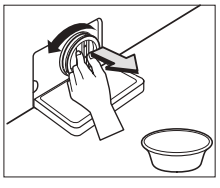
Fig.14

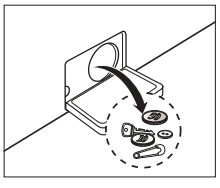
Fig.15

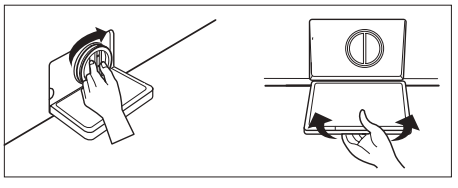
Fig.16

Cleaning the Detergent drawers and Recess

- Press release lever on the inside of the drawer and pull it out. (Fig.16)
- Remove the cap from the Fabric Softener compartment.
- Clean the drawer recess with a bristle brush. (Fig.17, Fig.18)
- Reinsert the cap (Pushing it firmly into place).
- Push the drawer back into place.
- Run a rinse program without any laundry in the drum.

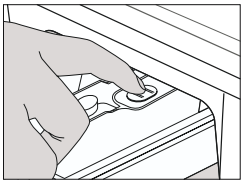
Fig.16

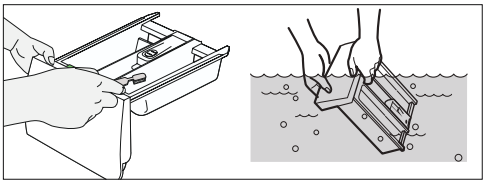
Fig.17

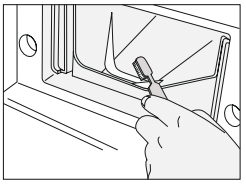
Fig.18

Cleaning the water inlet filter

- If water is very hard or contains traces of lime deposit, the water inlet filter may become clogged. It is therefore a good idea to clean it from time to time.

- Turn off the water tap. (Fig.19)
- Unscrew the water inlet hose. (Fig. 20)
- Clean the filter using a hard bristle brush under the running water. (Fig. 21)
- **Insert the filter into the valve** and tighten up the inlet hose. (Fig. 22)

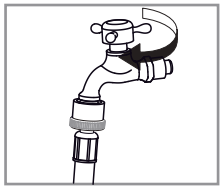

Fig.19

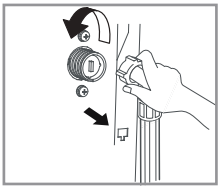

Fig. 20

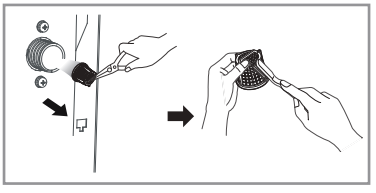

Fig. 21

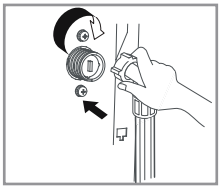

Fig. 22

Cleaning the drum

If you live in a hard water area, limescale may build up continuously in places where it cannot be seen and thus not easily
Over time the build up of scale clogs appliances, and if it is not kept in check these may have to be replaced.
Although the washing drum is made of stainless steel, specks of rust can be caused by small metal articles (paper clips, safety pins) which have been left in the drum.

- The washing drum should be cleaned from time to time.
- If you use descaling agents, dyes or bleaches, make sure they are suitable for washing machine use.
- Descaler may contain chemicals that may damage part of your washing machine.
- Remove any spots with a stainless steel cleaning agent.
- Never use steel wool.

Cleaning the machine

1.Exterior

Proper care of your washer can extend its life.

- The outside of the machine can be cleaned with warm water and a neutral non abrasive household detergent.
- Immediately wipe off any spills. Wipe with damp cloth.
- Try not to hit surface with sharp objects.
- Do not use methylated spirits, diluents or similar products.

2.Interior

- Dry around the washer door opening, flexible gasket and door glass.
- Run washer through a complete cycle using hot water.
- Repeat process if necessary.

NOTE To remove hard water deposits, use only cleaners labelled washer safe.

Clean Door gasket

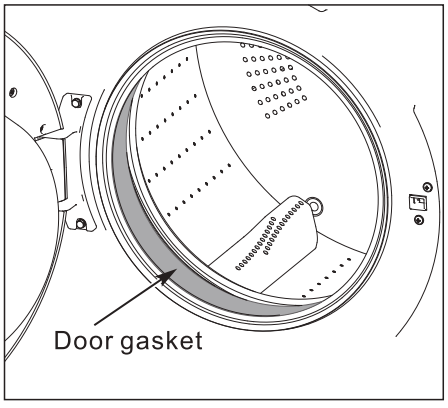

Clean the door gasket once a month to prevent buildup of dirt in the door gasket.

- Open the door, and then empty the drum.
- Combine 3/4 cups of liquid chlorine bleach and approx 6 pints of warm tap water.
- Turn over the rubber door gasket.
- Wearing rubber gloves, use a soft, clean cloth dipped in the water and bleach solution to clean the gasket.
- Let stand 5 minutes, and then wipe up and dry well.
- Put the rubber gasket back into position.

⚠ CAUTION

1. Clean the door gasket with undiluted liquid chlorine bleach may cause the door gasket and machine to malfunction. Dilute the bleach by adding it to water before using it.
2. Use bleach carefully and be sure to follow the bleach manufacturer's use and care instructions.

PET Cycle - Maintenance

If the PET Cycle is used, it is important to run a quick wash cycle without clothes following every load. After the cycle ends, wipe down the drum with a damp cloth to collect any pet hair on the drum surface. The lint filter should also be cleaned more frequently.

Emergency Release, e.g. the power failure occurs

The program continues running if the power is restored. If the laundry is still to be unload, the door can be opened as described below:

- Open the service flap.
- Drain the remaining water.
- Pull down the emergency release lever with a tool and release.
- Door can then be opened.
- Close the service flap.

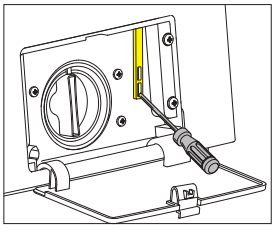

The dangers of freezing

If the machine is exposed to temperatures below 0°C, certain precautions should be taken.

- Turn off the water tap.
- Unscrew the inlet hose.
- Unhook the drain hose from the sink.
- Pull forward the drain hose and the inlet hose in a bowl placed on the floor, and let the water drain out.
- Screw the water inlet hose back on and reposition the drain hose.

When you intend to start the machine up again, make sure that the room temperature is above 0°C.

STAIN REMOVAL CHART

Blood

Rinse or soak fresh stain in cold water. Work detergent into any remaining stain. Rinse. If stain persists, put a few drops of ammonia on stain and repeat detergent treatment. Rinse. If necessary bleach.

Burn Marks

Rinse or soak in cold water. Work detergent into stain. Rinse. Bleach, if necessary. Stain may be impossible to remove.

Candle Wax

Scrape off excess. Place stain between clean white blotters or several layers of facial tissues. Press with warm iron. Sponge with cleaning fluid. If dye spot remains, bleach.

Chewing Gum

Rub with ice to harden. Scrape off excess with dull blade. Sponge with cleaning fluid.

Chocolate or Cocoa

Soak 15 minutes in cold water. Rub detergent paste into stain, then rinse thoroughly. Launder in hottest water safe for fabric. If colored stain remains, sponge with hydrogen peroxide, rinse and launder.

Coffee or Tea

Soak fresh stains immediately in cold water. Then use bleach treatment with hottest water safe for fabric. Launder.

Cosmetics (makeup, lipstick, etc.)

Apply undiluted liquid detergent to stain, or dampen stain and rub in soap or detergent paste until thick suds are formed. Work in until stain is gone, rinse well. Repeat if necessary. If color remains, bleach if safe for fabrics.

Cream, Ice Cream or Milk

Sponge stain with cool water or soak stain in cool water for 30 minutes or longer. If stain remains, work detergent on spot then rinse. Bleach if necessary.

Deodorants and Antiperspirants

Wash or sponge stain thoroughly with warm water and detergent; rinse. If stain remains, bleach with hot sudsy water. Launder. You may be able to restore fabric color by sponging with ammonia. Rinse thoroughly.

Dye

Rinse or soak in cold water. Work detergent into stain. Rinse. If necessary, bleach. Stain is not always possible to remove. A commercial color remover may also be used.

Egg or Meat Juice

Rinse in cold water. If stain remains, sprinkle with meat tenderizer, let stand 15-20 minutes. If stain still remains, sponge with cleaning fluid or diluted bleach. Launder in hot water. The use of hot water first may set stain.

Fabric Softener Stain

Rub with bar soap until stain has lightened. Rinse thoroughly. Launder. Rubbing alcohol is sometimes effective in the color of the garment can take it. Launder. If desired, dry cleaning can be used.

Felt tip pen

Spray spot with cleaners suitable to this purpose. Sponge stain thoroughly. Rinse with cold water. Reapply cleaner if necessary .

Fruit, Wine

Soak fresh stains immediately with cool water. Then use bleach treatment with hottest water safe for fabrics. Launder.

Grass

Work detergent into stain. Sponge with denatured alcohol. Bleach, if necessary.

Grease or Oil

Scrape away excess. Rub detergent paste or a general purpose liquid household cleaner into stain, rinse with hot water. If stain remains, sponge thoroughly with a grease solvent. Dry. Repeat if necessary. To remove yellow stain, use a chlorine or oxygen bleach.

Ink

Some ball-point inks are set by water. First test a scrap of cloth. Sponge stain repeatedly with acetone, amyl acetate or rubbing alcohol. Hair spray is effective. Launder. Bleach if necessary. Use amyl acetate on triacetate, arnel, dynel and verel. Use acetone on other fabrics. NOTE: Some inks cannot be removed.

Ketchup

Scrape of excess. Soak in cold water 30 minutes. Pre-treat with a detergent paste. Launder.

Mildew

Brush off surface growth to keep mold spores from spreading. Dip article into solution of ½ cup bleach per 1 gallon of cool sudsy water for 5 to 10 minutes. Rinse well. Launder.

Mud

Let stain dry; then brush well. Rinse repeatedly in cool water until mud comes out. Launder. (Hot soaps suds set a red or yellow clay stain).

Mustard

Soak in hot detergent water for several hours. If stain remains, bleach.

Nail Polish

Treat while fresh, scraping or wiping off as much as possible, before it dries. Place stain face down on white paper towels. Sponge back of stain acetone (nail polish remover) or sponge with denatured alcohol and a few drops of household ammonia. Sponge stain

frequently. Launder with water at temperature suitable for fabric. *Do not use acetone on acetate, arnel, dynel or rayon*.

Paint

Sponge or soak in turpentine or solvent recommended as a thinner on label. Launder.

Perfume

Rinse in cold water. Rub undiluted liquid detergent or a detergent paste into stain. Rinse. If stain remains, bleach.

Perspiration

Wash or sponge stain thoroughly with warm water and detergent paste. If perspiration has changed the color of the fabric, restore it by treating with ammonia or vinegar. Apply ammonia to fresh stains; rinse with water. Apply vinegar to old stains; rinse with water.

Rust and Iron

Apply commerical rust remover, Rinse. Or, if safe for fabric, boil stained article in solution of 4 teaspoons of cream of tartar to 1 pint water.

Shoe Polish

Scrape off as much as possible. Pre-treat with a detergent paste; rinse. If stain persists, sponge with rubbing alcohol (1 part to 2 parts water) or turpentine. Remove turpentine by sponging again with warm detergent solution or with alcohol. Bleach if necessary.

Soft Drinks

Sponge with cold water, some stains are invisible when they have dried, but turn brown when heated and may be impossible to remove.

Tar and Asphalt

Act quickly before stain is dry. Sponge with grease solvent or turpentine. Launder.

Urine

Soak in cool water. If stain is dry, work a detergent paste into the spot then rinse. If necessary, bleach.

TROUBLESHOOTING

In most cases, when your Super Washer fails to work, the problems arising can be easily solved without having to call for a technician. Before calling for assistance, always check these points.

Problem	Solution
Will not start	• Make sure the door is firmly closed. E-1 • Make sure your Washer is plugged in. • Make sure the water source faucets are open. • Make sure to press the Start/Pause Button to start your Washer. • Make sure the Child Lock is not activated. • Before your machine starts to fill, it will make a series of clicking noises to check the door lock and do a quick drain. • Check the fuse or reset the circuit breaker
Has no water or not enough water	• Turn both faucets on fully. E-3 • Make sure the door is tightly closed. • Straighten the water inlet hoses. • Disconnect hoses and clean filters. Hose filter screens may be clogged. • Open and close the door, then press the Start/Pause Button.
Vibrates or is too noisy	• Make sure your machine is set on a level surface. If the surface is not level, adjust your machine feet to level the appliance. • Make sure that the shipping bolts are removed. • Make sure your machine is not touching any other object. • Make sure the laundry load is balanced.
Load is too wet at the end of the wash cycle	• Use the High or Extra High spin speed. • Use high efficiency detergent to reduce over–sudsing. E-4 • Load is too small. Very small loads (one or two items) may become unbalanced and not spin out completely.
Leaks water	• Make sure the door is firmly closed. • Make sure all hose connections are tight. • Make sure the end of the drain hose is correctly inserted and secured to the drainage system. • Avoid overloading. • Use Front loading detergent to prevent over - sudsing. E-4
Door locked or will not open	• Press the Start/Pause Button to stop your machine. • Your machine door will remain locked during the heating portion of the Sanitize Cycle • It may take a few moments for the door lock mechanism to disengage.
Does not drain and/or spin	• Check the fuse or reset the circuit breaker. • Straighten the drain hoses. Eliminate kinked hoses. If there is a drain restriction, call for service. E-2 • Close the door and press the Start/Pause Button. For your safety, your Washer will not tumble or spin unless the door is closed.
Has excessive suds	• Use Front loading detergent to prevent over-sudsing. E-4 • Reduce the detergent amount for soft water, small or lightly soiled loads. • Non Front loading detergent is NOT recommended.
Continuously fills and drains water	• Check if the drain hose is positioned too low. • Check that the inlet hose is not connected at a height more than 3 feet (100 cm) above the floor.

ERROR CODES		
Code	Description	Component
E1	Door close	Door Switch
E2	Drain	Drain Pump
E3	Water inlet	Inlet Valves
E4	Water overfill	Pressure Switch
E5	Motor	Motor +Electronic Module
E7	Washing heater failure	Washing heater
E10	Water level failure	Water level sensor
E16	Communication between display & electronic module	Communication Cable

Information or Parts:

www.ApplianceDesk.com/Parts

Vented Dryer

Model - 866

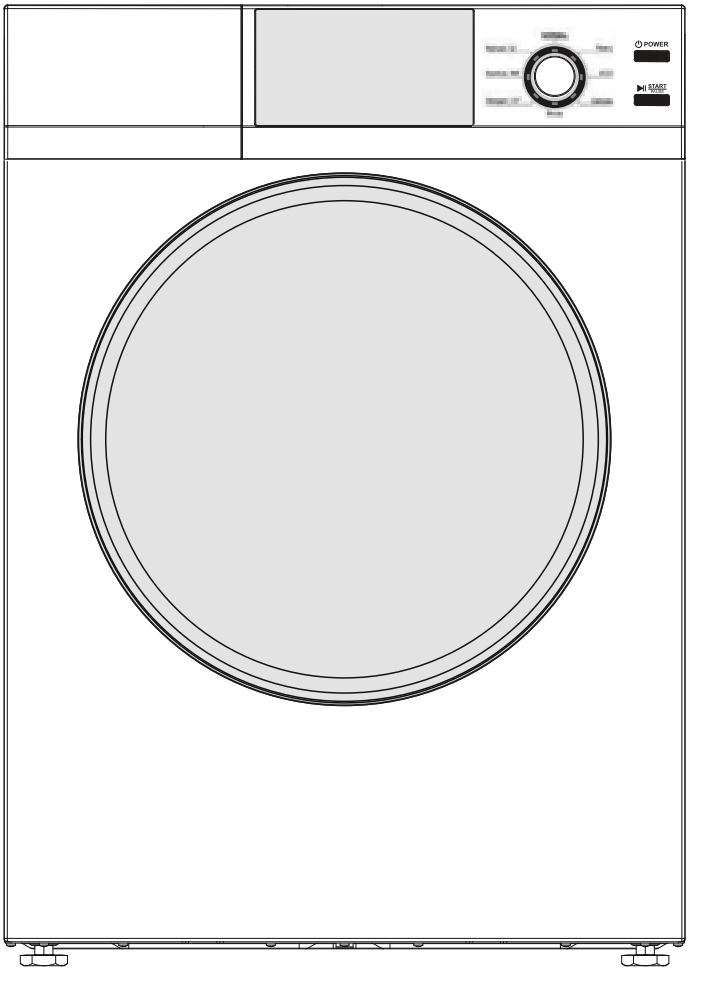

OWNER'S MANUAL

Read the instructions carefully and keep for future reference. Information maybe updated from time to time so please refer to the website for the latest version of the manual.

STOP

DO NOT RETURN TO STORE!

HAVE QUESTIONS OR NEED SERVICE?

CALL NOW 1-800-776-3538 Service@ApplianceDesk.com

WARRANTY INFORMATION

Your appliance is protected by this warranty under normal, personal, family or household use for 1 Year Parts & Labor and limited commercial use (90 days) in USA and Canada.

WARRANTY

Consolidated Brands undertakes to the consumer / owner to repair or, at our option, to replace any part of this product which proves to be defective in workmanship or material under normal personal, family or household use, in USA and Canada, for a period of one year parts and labor, two years motor and five years rust only from the date of original purchase. For commercial use, the product is warranted for a period of 90 days.

During this period, we will provide all labor and parts necessary to correct such defect, free of charge, if the appliance has been installed and operated in accordance with the written instructions provided with the appliance. Ready access to the appliance, for service, is the responsibility of the consumer / owner. If a unit is installed in a closet or cabinet, it should be removed by the consumer / owner, for access by service technicians. If this is not done, there will be an extra charge.

EXCLUSIONS

In no event shall Consolidated Brands be liable for incidental or consequential damages or for damages resulting from external causes such as abuse, operation misuse, neglect, alterations, normal wear and tear, incorrect voltage or acts of God. This warranty does not cover service calls which do not involve defective workmanship, damage due to other products while combined use with this product or materials covered by this warranty. Accordingly, diagnosis and repair costs for a service call which does not involve defective workmanship or materials will be the responsibility of the consumer / owner.

Most work is covered. The defining factor is, has the machine malfunctioned (Consolidated Brands is responsible) or has the customer omitted or done something to cause malfunction (customer is responsible). Some states do not allow the exclusion or limitation of incidental or consequential damages, so the above limitation or exclusion may not apply to you.

You can register your Warranty by either of the following methods:

1. Scan QR Code

- Open Smart Phone
- Open Camera
- Click the Link

Chat-AI

2. Register online at ApplianceDesk.com/Warranty
3. QR Code is also used to obtain Product Information, Manuals and Updates

WARRANTY SERVICE

This warranty is given by:
Consolidated Brands
10222 Georgibelle Drive, Suite 200,
Houston, TX 77043-5249

Customer Service: **Appliance Desk**
Phone / Text: 1-800-776-3538
Email: Service@ApplianceDesk.com
Web: www.ApplianceDesk.com
Business hours: 9:00 am to 5:00 pm weekdays

THE FOLLOWING WORK ARE NOT COVERED UNDER WARRANTY:

Installation

1. Non-removal of shipping bolts, causing vibration / internal damage.
2. Non-adjustment of feet to level machine, causing vibration / internal damage.
3. Using incorrect length of venting i.e. more than 10 feet unless used with a booster fan.
4. Not conforming to minimum space requirements for built-in installation, causing excess heat and resulting in damage to internal components.
5. Installation in a corrosive environment.

Maintenance

1. Non-cleaning of vent fan & exhaust hose for lint, causing the unit to not dry properly.
2. Improper maintenance (such as, but not limited to, scale build-up, freeze damage, or vent blockage).

Damage

1. Breakage of cosmetic parts e.g., door handle, knob.

Other

1. Accident, abuse or misuse.
2. Using solvents to clean the machine, causing damage.
3. Misapplication of this product e.g., use in a non household/commercial environment.
4. Any other cause not due to defects in materials or workmanship.
5. Problems or damage due to fires, flooding, electrical surges, freezing or any acts of God.
6. Force majeure.

Warranty Limitations

1. If a unit is located more than 25 miles away, there will be a trip charge.
2. If a unit is in a remote area more than 75 miles away, the machine should be taken to the technician's workshop.
3. If the unit is installed in a 5th wheel RV, in a location behind the axle, it will not be covered under warranty.
4. All repairs or replacements are warranted only for the remainder of the original warranty period.
5. If a return or replacement is required, allow 3-4 weeks to process.
6. Replacement units will be delivered with curbside delivery only.
7. We may require the return of products or parts to our warranty department for which the shipping charges are to be pre-paid by the consumer / owner.
8. Charges may be incurred if warranty coverage is not applicable.
9. Service would be provided from Monday to Friday between normal business hours.

GENERAL

Since it is the responsibility of the consumer / owner to establish the warranty period by verifying the original purchase date, Consolidated Brands recommends that a receipt, delivery slip or some other appropriate payment record be kept for that purpose. This warranty gives you specific legal rights, and you may also have other rights which vary from state to state.

All rights reserved. Manual subject to change without notice.

Congratulations on your new Vented Dryer!

In addition to its contemporary design, this is a highly sophisticated engineered product that will give you many years of satisfaction.

Here are some of the best reasons for buying your Dryer:

- Options for Sensor and Time Dry programs
- Sanitize and Allergen programs for ultimate clean clothes
- Refresh program and Auto Wrinkle Guard for perfectly dry clothes
- Delay time to operate dryer at your convenience
- 110V lets you plug it in anywhere
- Reversible door option as preferred
- Safety Lock

Safety

In order to reduce the risk of fire, electric shock, and/or injury, please follow safety precautions. Read all instructions carefully and save for future reference.

- Use the appliance indoors. It is not intended to be used outdoors.
- Ensure that open flame sources, such as candles are not placed on top of the dryer.
- Do not place items in the dryer that are soiled with flammable liquids, oils and other chemicals. These items should be washed thoroughly before placing them in the dryer.
- Ensure fabric softeners or products to eliminate static are not used inside the dryer, unless recommended by manufacturers of these products.
- Do not dry items containing rubber, plastic or similar materials.
- Ensure the dryer and electrical cord are not placed near heat sources, such as radiators, heaters, air ducts or in direct sunlight.
- Ensure vents and ventilation openings are not blocked.
- Ensure the power cord is not bent or twisted, and not exposed in an area where is could be a tripping hazard.
- Do not use the dryer if the cord is damaged.
- To disconnect the dryer, press the power button to turn it off, then grasp the plug of the power cored firmly and pull straight out of the outlet.
- Do not open the dryer and reach into the drum while it is rotating.
- Ensure the dryer is not overloaded.
- Do not tamper with controls.
- Perform regular maintenance and cleaning of lint filter after each use. Ensure periodic cleaning of exhaust duct is done by a qualified technician.
- Check that foreign objects are not in the drum.
- This appliance is not intended for use by persons, including children, with reduced physical, sensory or mental capabilities, or lack of experience and knowledge, unless they have been given supervision or instruction concerning use of the appliance by a person responsible for their safety.
- Do not allow children to play on or in the appliance. Close supervision of children is necessary when the appliance is used near children.

Safe Disposal

Before discarding the appliance, please remove the door to prevent risk of child entrapment.

Keep children away from the shipping carton and packing components.

Please dispose off this appliance and all packaging material in accordance with local regulations.

California Proposition 65

WARNING: This product contains chemical known to the State of California to cause cancer and birth defects or other reproductive harm.

Technical Data

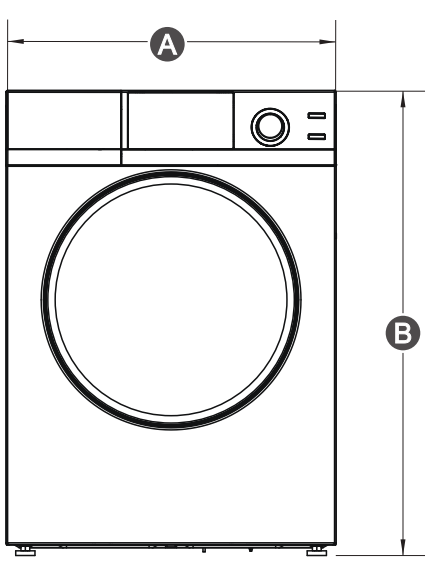

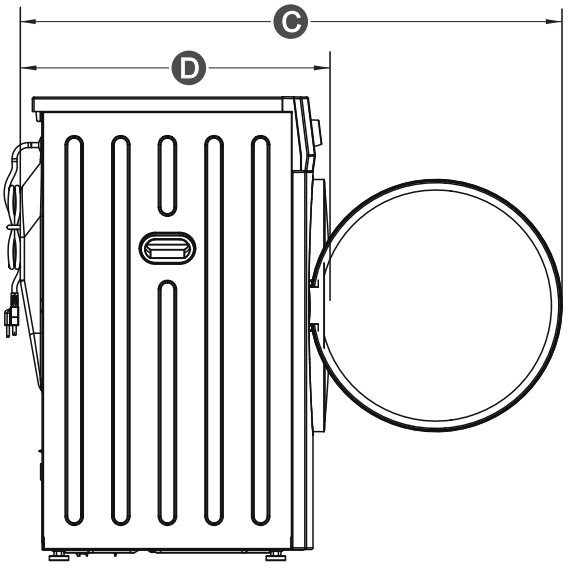

Type		Vented Electric Dryer
Model		**866**
Dimensions (inches / mm)	A. Width	23.6 / 600
	B. Height-overall	33.5 / 850
	C. Depth with door open	22.2 / 565
	D. Depth	38.9 / 988
Rated voltage		110-120V / 60Hz 12A
Dry capacity (cu. ft. / L)		3.1 / 88
Net weight (lb / kg)		79 / 36
Heater rating (W)		1,200
Power consumption	No heat (W)	240
	Heating (W)	1,440

Intertek

4007606

US **N°** 4007606 **CANADA**

The ETL Listed Mark is the legal equivalent to the UL and CSA Listed Marks

Diagram of the Dryer

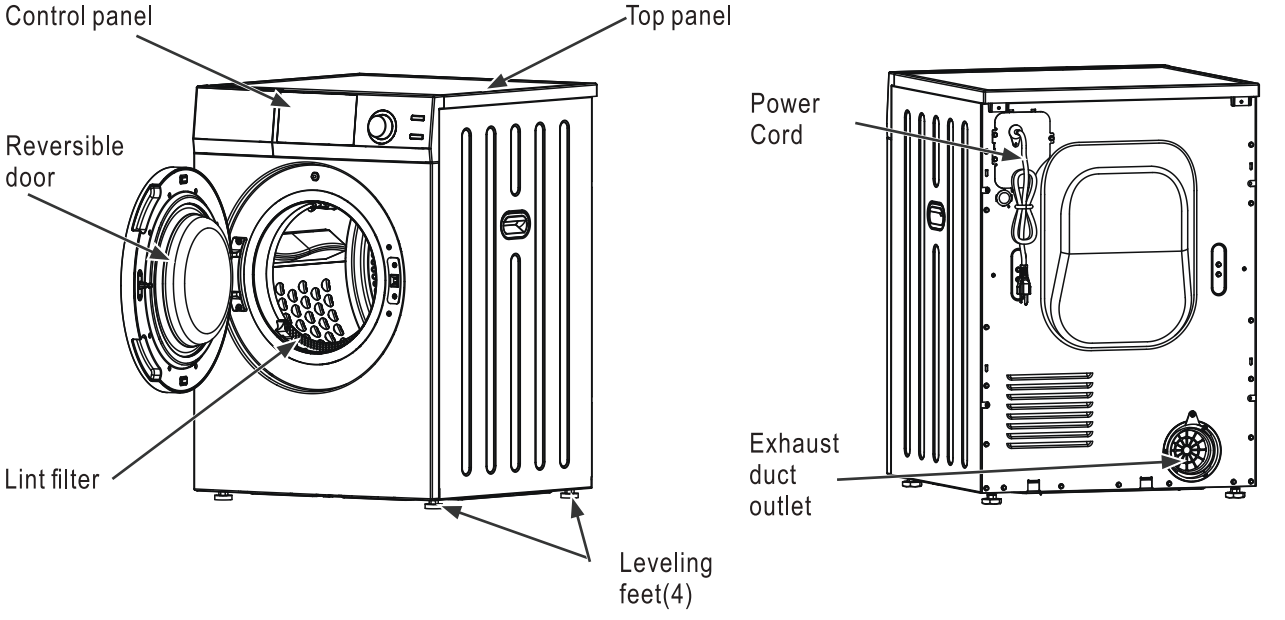

Accessories

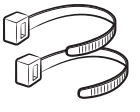

Hose tie

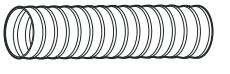

Exhaust hose

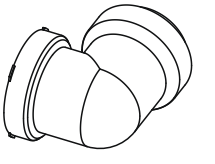

Exhaust elbow

NOTE:

1. For your safety and for extended product life, use only authorized components. The manufacture is not responsible for product malfunction or accidents caused by the use of separately purchased unauthorized components or parts.
2. The images in this manual may be different from the actual components and accessories, and are subject to change by the manufacture without prior notice for product improvement purpose.

Installation

The dryer must be installed and serviced by a qualified technician.

Install the dryer according to manufacturer's instructions and local codes.

- The dryer must be properly grounded. Do not modify the plug.
- Do not install the dryer in a tight-fitting cabinet. Ensure there is adequate ventilation space all around the dryer (please see detailed installation instructions).
- Do not use flexible plastic venting materials which may collapse. Use only vent hoses that are approved by the manufacturer.
- In Canada and the United States, only those foil-type flexible ducts, if any, specifically identified for use with the appliance by the manufacturer shall be used and that comply with the outline for the Clothes Dryer Transition Duct, subject to 2158A, shall be used.
- In Canada, the exhaust duct shall be 4” (10.2 cm) in diameter.
  In the United States, the exhaust duct shall be 4” (10 cm) in diameter.
- The total length of flexible metal duct shall not exceed 8 feet (2.4 m).
- The duct shall not be assembled with screws or other fastening means that extend into the duct and catch lint.
- The appliance shall no be exhausted into a chimney, wall, ceiling, attic, crawl space, or a concealed space of a building.

Built-In, Recessed, Closet and Alcove Installation

- The dryer MUST be vented to the outdoors.
- The dryer may be installed in a built-in, recessed area, closet or alcove.
- The installation spacing is in inches and is the minimum acceptable.
- Other installations must use the minimum dimensions indicated.
  a) Minimum clearances between the dryer cabinet and adjacent wall are: 2" either side and 3" front and rear.
  b) Minimum vertical space from floor to overhead cabinets, etc. is 52" (132cm).
- The rear of the dryer should face a wall.
- Consideration must be given to provide adequate clearance for installation and service.
- Closet doors must be louvered or otherwise ventilated and have at least 60 square inches of open area. If the closet contains both a washer and a dryer, door must contain a minimum of 120 square inches of open area.
- No other fuel-burning appliance shall be installed in the same closet with the dryer.

NOTE: If a door is installed that potentially encloses the unit while running, the door must allow for a minimum of 20 square inches of free air movement. There must also be a 1" additional spacing should be considered for easy installation, servicing and compliance with space in front of the unit to the closed door and 1" from the back of the unit to the wall.

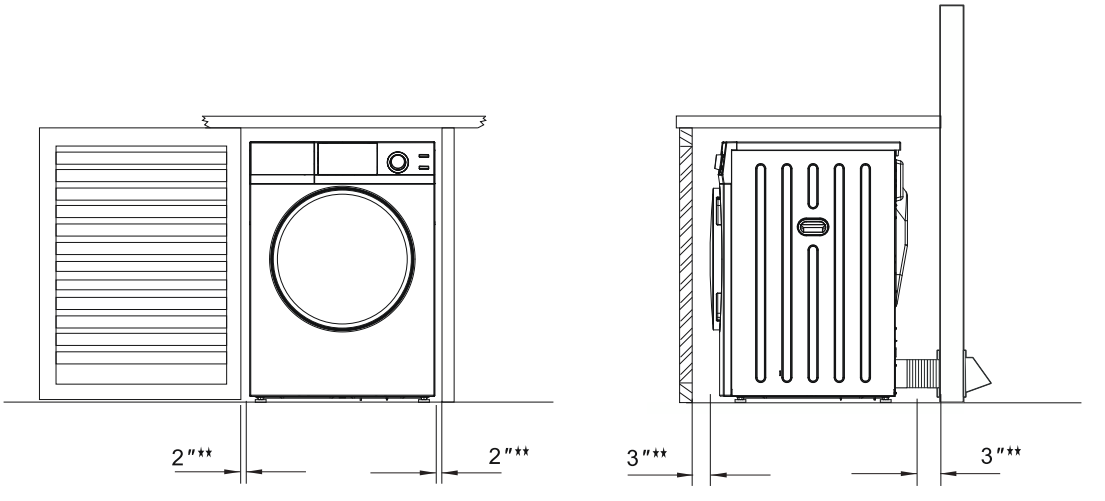

Minimum clearance other than alcove or closet installation

- Minimum clearance between the dryer cabinet and adjacent walls or other surfaces is: 2" clearance both sides and 3" rear.
- The rear of the dryer should face a wall.
- Consideration must be given to provide adequate clearance for installation and service.

Mobile home installation

- The dryer must be exhausted to the outdoors with the termination securely fastened to the mobile home structure. The exhaust **MUST NOT** be terminated beneath the mobile home or manufactured home.
- Provisions must be made for the introduction of outside air into the dryer. The free air opening shall not be less than 25 square inches.
- The exhaust duct material **MUST BE METAL.**
- The vent duct **MUST NOT** be connected to any other duct, vent or chimney.
- The dryer must be attached to the floor following instructions available from the dealer.
- Installation must comply with the current **CAN/CSA Z240MH** series Mobile Home Installation Codes.
- **DO NOT** use sheet metal screws or other fastening devices which extend into the interior of the exhaust vent.

Level the Dryer

1. Follow the installation requirement to install the dryer.
2. Move your dryer to an appropriate location. Consider installing the dryer and washer side-by-side, to allow access to electrical, and exhaust connections.
3. Set your dryer back in an upright position.
4. To ensure that the dryer provides optimal drying result, it must be leveled. To reduce the vibration, noise and unwanted movement, the floor must be a perfectly level, solid surface.
5. Adjust the leveling feet only as much as necessary to level the dryer. Extending the leveling feet more than necessary can cause the dryer to vibrate.

Fasten the lock nuts of 4-leveling feet against the bottom floor after the dryer is leveled.

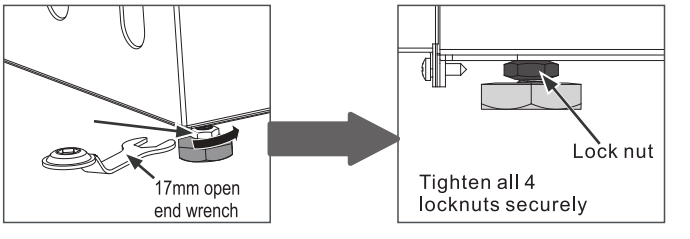

ADA Compliance

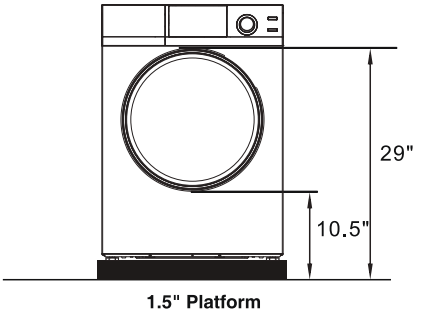

1.5" Platform

Use 1.5” height platform to make the machine ADA compliant.

Venting Connections

- This dryer MUST be vented to the outdoors.
- Use only 4" (10.2 cm) rigid metal duct for the home exhaust duct.
- Use only 4" (10.2 cm) rigid metal, UL-listed flexible metal, or UL-listed metal foil dryer transition duct to connect the dryer to the home exhaust.
- **Do not** use flexible duct inside the dryer.
- **Do not** exhaust into a chimney, kitchen exhaust, gas vent, wall, ceiling, attic, crawl space, or concealed space of a building. The combination of lint and grease could create a fire hazard or damages.
- **Do not** install a screen in or over the exhaust duct.
- **Do not** install a booster fan in the exhaust duct.
- **Do not** use duct longer that specified in the exhaust length table.
- Provide an access for inspection and cleaning the exhaust system at least once year.
- Failure to follow these instructions can result in death or fire.

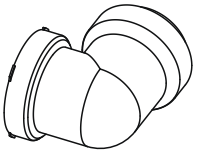

This Dryer Vent Elbow attachment is included with your Dryer.
Attach it to the Exhaust Duct outlet at the back of your Dryer.

Exhaust system check list hood or wall cap

- Terminate in a manner to prevent back drain or entry of birds or other wildlife.
- Termination should present minimum resistance to the exhaust air flow and should require little or not maintenance to prevent clogging.
- Wall caps must be installed at least 12" (30 cm)above ground level or any other obstruction with the opening pointed down.
- If roof vents or louvered plenums are used, they must be equivalent to a 4" (10.2 cm) dampened wall cap in regard to resistance to air flow. Prevention of back drafts and regular maintenance are required to prevent clogging.

Separation of turns

Separate all turns by at least 3 ft. (1 m) of straight duct, including distance between last turn and dampened wall cap. If two turns must be closer than 3 ft. (1 m) deduct 10 ft. (3 m) from the maximum length.

Turn other than 90°

- One turn of 45° or less may be ignored.
- Two 45° turns should be treated as one 90°.
- Each turn over 45° should be treated as one 90°.
- Deduct 10 ft. (3 m) for each additional elbow. It is not recommended to use more than three 90° elbows.

Sealing of joints

- All joints should be tight to avoid leaks. The male end of each section of duct must point away from the dryer.
- Do not assemble the duct work with fasteners that extend into the duct. They will serve as a collection point for lint.
- Duct joints can be made air and moisture-tight by wrapping the overlapped joints with duct tape.

Routing and connecting ductwork.

- Ductwork and fittings are NOT included and must be purchased separately.
- The exhaust duct run should be as short as possible.
- Use as few elbow joints as possible.
- The male end of each section of exhaust duct must point away from the dryer.
- Insulate ductwork that runs through unheated areas in order to reduce condensation and lint buildup on duct surfaces.
- Incorrect or inadequate exhaust systems are not covered by the dryer warranty.

Insulation

Ductwork which runs through an unheated area or is near an air conditioning duct, should be insulated to reduce condensation and lint build up and be sloped down toward outdoors.

Note: Never install screen inside exhaust duct.

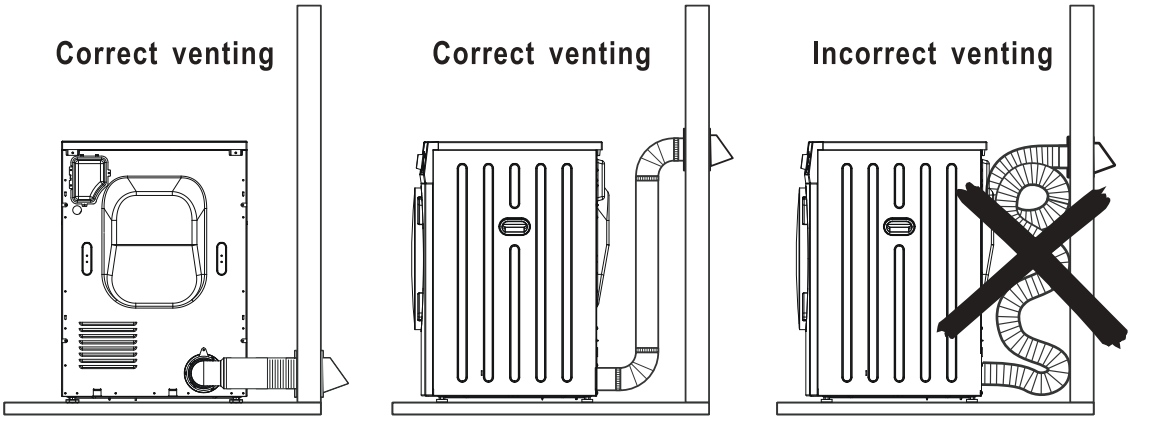

EXHAUST LENGTH	Wall Cap Type			
	Recommended		Use only for short-run installation	
	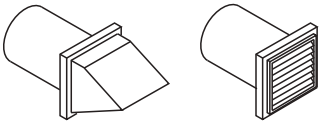 4" (10.2cm)		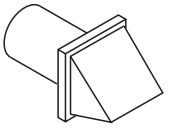 2.5" (6.4cm)	
No. of 90° elbows	Rigid	Metallic Flexible	Rigid	Metallic Flexible
0	24.4 m (80 ft.)	12.5 m (41 ft.)	22.6m (74 ft.)	10.1 m (33 ft.)
1	20.7 m (68 ft.)	11.3 m (37 ft.)	18.9 m (62 ft.)	8.8 m (29 ft.)
2	17.4 m (57 ft.)	10.1 m (33 ft.)	15.5 m (51 ft.)	7.6 m (25 ft.)
3	14.3 m (47 ft.)	8.8 m (29 ft.)	12.5 m (41 ft.)	6.4 m (21 ft.)

Do not use non-metallic flexible duct.

Electrical

Wiring diagram is located on the back of the dryer.

⚠ WARNING

- Improper connection of the equipment grounding conductor can result in a risk of electric shock. Check with a qualified electrician or serviceman if you are in doubt as to whether your dryer is properly grounded.
- To prevent unnecessary risk of fire, electric shock, or personal injury, all wiring and grounding must be done in accordance with local codes.
- It is your responsibility to provide adequate electrical services for your dryer.
- Before operating or testing, follow all grounding instructions in the Grounding section.
- An individual branch (or separate) circuit serving only your dryer is recommended. **DO NOT USE AN EXTENSION CORD.**
- Before making the electrical connection, turn off the circuit breaker(s), or remove the dryer's circuit fuse(s) at the electrical box. Be sure the dryer cord is unplugged from the outlet.

This dryer must be connected to an individual circuit identical to the one specified on the rating plate of the loading prot protected by fuses or circuit breaker conforming to loacal codes.

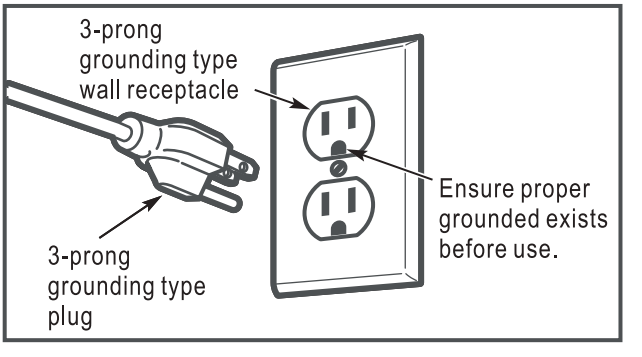

Grounding instructions

For a grounded, cord-connected dryer: This dryer must be grounded. In the event of malfunction or breakdown, the grounding will reduce the risk of electric shock by providing a path of least resistance for the electrical current. This dryer uses a cord having an equipment-grounding conductor and a grounding plug. The plug must be plugged into an appropriate outlet that is properly installed and grounded in accordance with all local codes and ordinances.

⚠ WARNING

Improper connection of the equipment-grounding conductor can result in a risk of electrical shock. Check with a qualified electrician, or service representative or personnel, if you are in doubt as to whether the appliance is properly grounded. DO NOT modify the plug provided with the appliance: if it will not fit the outlet, have a proper outlet installed by a qualified electrician.

Control Panel

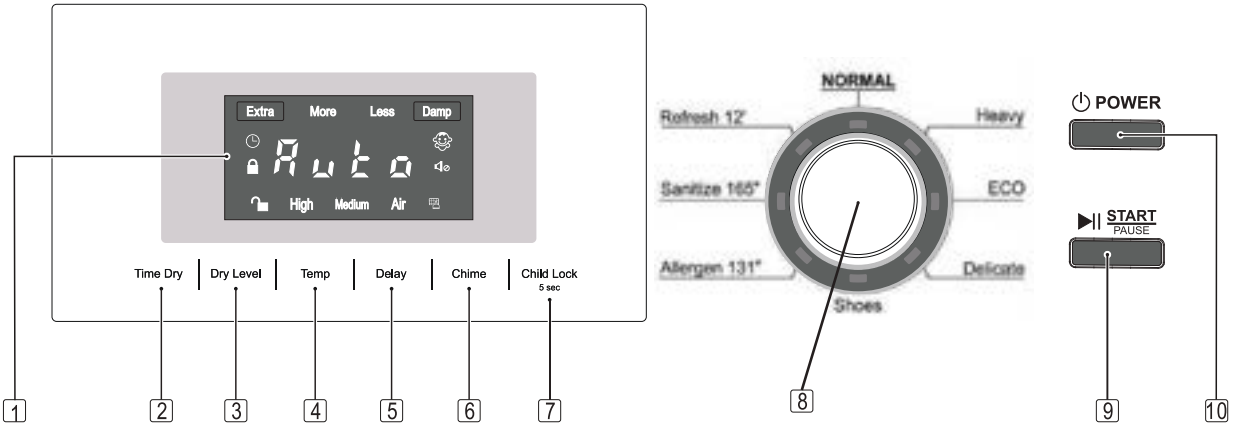

1 Display Screen	The **Display screen** shows the estimated time remaining in the dry cycle. It also illuminates options that are selected for Dry Level, Temperature (heat level), Delay start, Chime, Child lock, and Clean Filter Reminder.
2 Time Dry	Press **Time Dry** to select the minutes to run the dry cycle.
3 Dry Level	Press **Dry Level** to select how much you want the clothes to dry. Press repeatedly to select from Extra, More, Less or Damp.
4 Temp.	Press **Temp.** to select the heat level for drying clothes. Press repeatedly to select from: High, Medium or Air.
5 Delay	Press **Delay** to start the dry cycle at a later time. Select from 1 to 24 hours.
6 Chime	Press **Chime** to turn the end of cycle chine sound, or button chime sound on or off.
7 Child Lock	The Child Lock function prevents children from playing with the buttons on the control panel. Press and hold **Child Lock** for 5 seconds to set or release the Child Lock.
8 Dry Cycle Dial	To select a dry cycle, rotate the **Dry Cycle Dial** to the desired cycle: Normal, Heavy, ECO, Delicate, Shoes, Allergen 131°, Sanitize 165°, and Refresh 12'.
9 Start / Pause button	Press the **Start/ Pause** button to start, pause, or restart the dry cycle.
10 Power button	Press the **Power** button once to turn the dryer on. Press and hold it for 3 seconds to turn the dryer off.

Display Panel

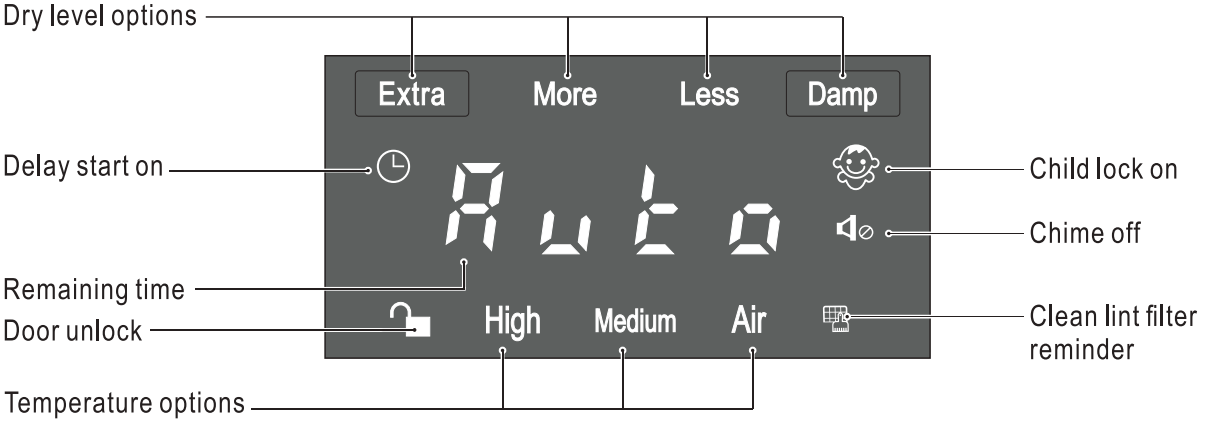

OPERATING INSTRUCTIONS

Before using the Dryer, please check the inside of the drum to ensure that children or pets have not climbed into the appliance.

Operating the Dryer

Before Starting the Dry Cycle

- Empty pockets of items
- Do not dry clothes with residues of oil or flammable substances
- Follow clothing manufacturer's care labels.

Load clothes loosely into the dryer, ensuring that the clothes have enough room to tumble and to let the air circulate through the clothes. Filling the dryer with too many clothes will require more time to dry and may cause wrinkle in the clothing.

Ensure that lint has been removed from the filter for efficient drying.
The Clean Lint Filter Reminder icon will flash on the display screen.

Power On

Close the door firmly and press the **Power** button to turn on the dryer. If the door is not closed properly, the **door unlock** icon will appear on the **Display Screen**.
The LED will illuminate on the **Display Screen** and on the **Dry Cycle Dial**.
The default setting is for **NORMAL** dry cycle, "**More**" Dry Level, "**Medium**" Temp and **2** hours dry time.

Select a Dry Cycle

If the default **NORMAL** dry cycle is desired, the cycle can be started. If an alternate cycle is desired, rotate the **Dry Cycle Dial** in either direction to any of the other cycles: **Heavy**, **ECO**, **Delicate**, **Shoes**, **Allergen131°**, **Sanitize165°**.
The indicator light by the cycle name will illuminate. Each of the cycles has pre-set dry times, dry levels and temperatures, based on sensor drying. Sensor dry cycles monitor the moisture in the clothes and shut the dryer off automatically when the selected dry level is reached.
Note: The time shown remaining on the display screen may increase or decrease during the dry cycle as the sensor dry function monitors for moisture in the clothes and adjusts the time.

Refresh

Refresh 12' is a time dry cycle which tumbles the clothes for a short time while blowing hot air into the drum. This reduces wrinkles and refreshes the clothes. Use this cycle after the drying is completed and before taking clothes out of the dryer. This is optional.

Select Dry Level and Temperature

After the dry cycle is selected, you have the option to change the Dry Level and the Temperature.

- Press Dry Level to select how much you want the clothes to dry. Press repeatedly to select from: Extra, More,Less or Damp. The selection will illuminate on the display screen.
- Press Temp to select the heat level for drying clothes. Press repeatedly to select from: High, Medium or Air. The selection will illuminate on the display screen.

Note: Some dry cycles do not allow these settings to be changed. For example, Allergen and Sanitize only use High heat.

Options

In addition to selecting the dry level and temperature, you can also select options on the Control Panel for **Delay**, **Chime** and **Child Lock**.

- Press **Delay** to start the dry cycle at a later time. Select from 1 to 24 hours. Each time you press increases the time in one-hour increments.
- Press **Chime** to turn the end of cycle chime sound on or off. An indicator light will illuminate on the **Display Screen** to show if the Chime is on or off.
- The Child Lock function prevents children from playing with the buttons on the control panel. Press and hold **Child Lock** for 5 seconds to set or release the Child Lock. An indicator light will illuminate on the display screen to show that the Child Lock is set. Once Child Lock is set, no button except for the **Power** button will function until the Child Lock has been released.

Time Dry

If you want to set a specific time for drying (not using sensor dry cycles) press **Time Dry** to select the minutes to run the dry cycle. Repeated pressing of **Time Dry** increases the time in 10-minute increments up to one hour.

Start the cycle

After dry cycle and options have been selected, Press the **START/PAUSE** button to start the cycle. The cycle can be paused at any time either by opening the door, or by pressing the **START/PAUSE** button.

End of the cycle

When the cycle is completed, "**End**" will be displayed on the screen and the chime will sound if it has been set. Open the dryer door and remove the clothes from the dryer. It is recommended that clothes be removed from the dryer when the cycle ends and the clothes are still warm. Folding them right away will reduce wrinkles.

If clothes have been sitting in the dryer for a while after the cycle has ended, the **Refresh 12'** cycle can be run for a quick refresh of the clothes.

Program Selection Chart

Cycle	Fabric type	Dry level (Default)	Temperature (Default Heat)	Sensor Dry Pre-set Time
NORMAL	Mixed cottons	More	Medium	2 hrs
Heavy	Towels, jeans	Extra	High	2 hrs 30 mins
ECO	Mixed cottons	More	Medium	1 hr 40 mins
Delicate	Silk, Wool	Damp	Air	2 hrs
Shoes	Shoes	More	Medium	2 hrs
Allergen 131°	Sheets	Extra	High	2 hrs 15 mins
Sanitize 165°	Mixed Cottons	Extra	High	2 hrs 30 mins
Refresh 12'	Mixed and Heavy	—	Medium	12 mins

NOTE: For **Allergen** 131°, **Sanitize** 165° and **Delicate** cycles, the **Dry Level** and **Temperature** cannot be changed from the default settings.

Allergen Function
The Allergen 131° cycle heats the air to 131°F to remove allergens from clothes. This Sensor Dry cycle is pre-set to High heat temperature and Extra Dry Level and runs for 2 hours and 15 minutes. Turn the Dry Cycle Dial to Allergen 131° and press the Start/Pause button.
Clothes that have already been dried in another dry cycle, can be additionally run in the Allergen 131° cycle. Turn the Dry Cycle Dial to Allergen 131°, and press Time Dry and select the minutes to dry, then press the Start/Pause button.

Sanitize Function
The Sanitize 165° cycle heats the air to 165°F to remove germs from clothes. This Sensor Dry cycle is pre-set High heat temperature and Extra Dry Level and runs for 2 hours and 30 minutes. Turn the Dry Cycle Dial to Sanitize 165°, and press the Start/Pause button.
Clothes that have already been dried in another dry cycle, can be additionally run in the Sanitize 165° cycle. Turn the Dry Cycle dial to Sanitize 165°, and press Time Dry and select the minutes to dry, then press the Start/Pause button.

Drying Rack (Optional)
The drying rack can be used to dry items such as delicates and shoes.

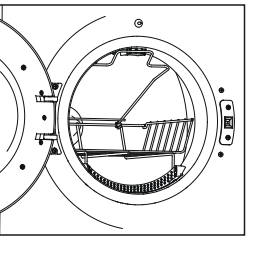

- Install the drying rack by placing the front lip on top of the lint filter.
- Place items to be dried flat on the rack, leaving enough space for air circulation.
- Lower the top bar onto the rack to hold the items in place.

Maintenance

To reduce the risk of electric shock, disconnect this dryer from the power supply before attempting any user maintenance other than cleaning the lint trap at the door. Pressing the POWER button does not disconnect this appliance from the power supply.

Cleaning

Clean with a soft, damp cloth. Do not use abrasive substances.
Do not spray cleaners directly on the panel.
The control panel finish may be damaged by some laundry pre-treatment soil and stain remover products.
Apply such products away from your dryer and wipe up any spills or over spray immediately.
Protect the surface from sharp objects as they may scratch or damage the finish.
Do not place any heavy or sharp objects or a detergent box on the dryer. Keep them on the purchased pedestal or in a separated storage box.

Lint Filter

Clean the lint filter before each dry cycle.
Pull the lint filter straight up. Moisten your fingers and remove the captured lint. Once clean, slide the filter back into its position.
Have a qualified technician vacuum the lint from the dryer once a year.
NEVER operate the dryer without its lint filter in place.
NEVER operate the dryer with a wet lint filter.

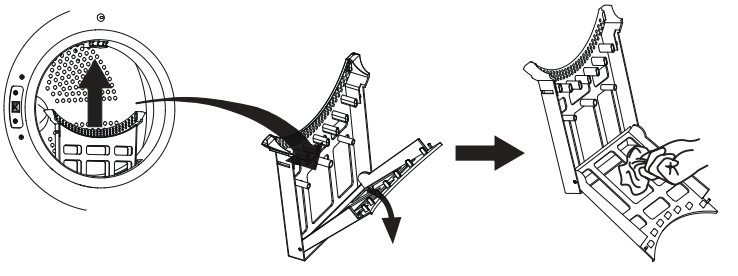

Clean the lint filter at exhaust outlet regularly.

1. Release the tie to remove the exhaust hose from the exhaust elbow.

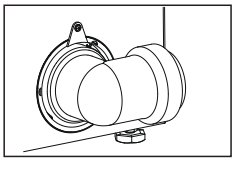

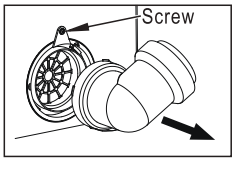

2. Turn the exhaust elbow counter clockwise about 30°, and pull it out.

3. Unscrew the screw that hold the lint filter in its place. Turn the filter about 30°, then pull it out. Clean all the lint on the filter and in the exhaust duct.

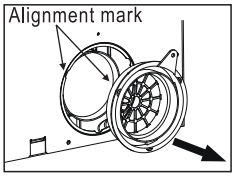

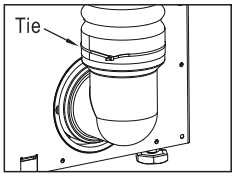

4. Re-install all the parts by following the reserve steps.

Door Reversal

Reversing the Door Swing (Optional)

- Before you start, unplug your dryer from its electrical outlet.
- Handle any parts carefully to avoid scratching the surface.
- This dryer must be exhausted to the outdoors.
- Do not move the dryer when service until door swing reversal completed.
- These steps are for changing the hinge and door assembly from left side to the right side. If you ever want to switch them back to the left side, follow these instructions and reverse all references to the left and right.

Step 1. Open the door. Remove the two screws holding the hinge/door assembly to the cabinet. Carefully set them aside.

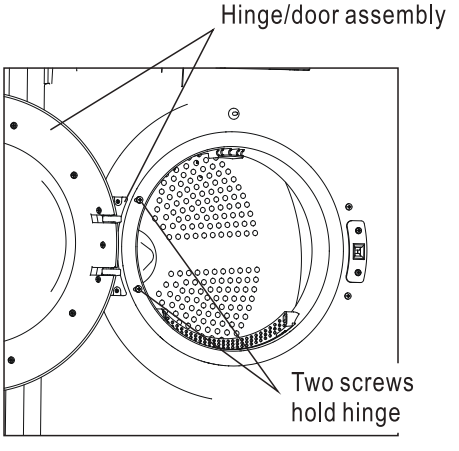

Step 2. Remove the two screws holding the strike plate , and the other two screws above and under the strike plate.

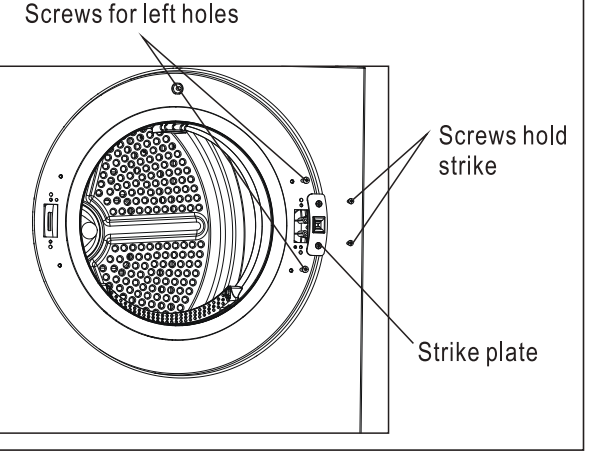

Step 3. Rotate the strike plate, then re-install it on the opposite side. And screw the other two screws into the holes left after remove the hinge/door assembly.

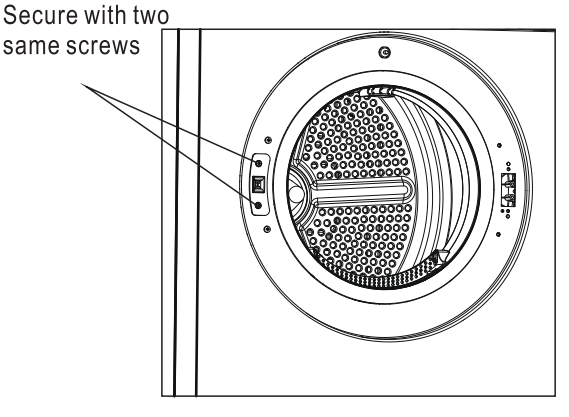

Step 4. Rotate and replace the hinge/door assembly on the opposite side, secure them using the same screws.

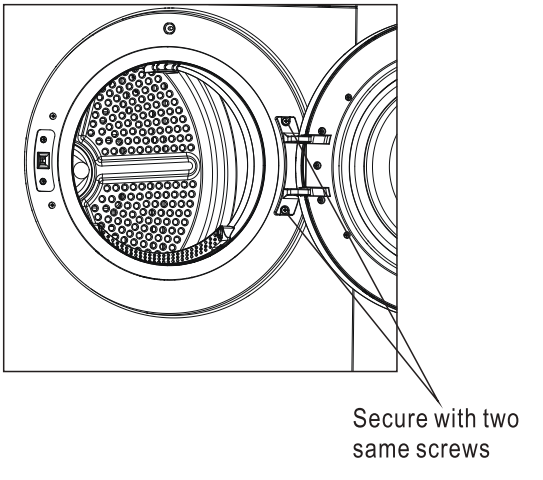

Troubleshooting

In most cases, when your Dryer fails to work, the problems arising can be easily solved without having to call for a technician. Before calling for assistance, always check these points.

Problem	Possible Causes	Solutions
Dryer will not tur on	Power cord is not properly plugged in.	Make sure that the plug is plugged securely into a grounded outlet matching the dryer's rating card.
	House fuse is blown, circuit breaker has tripped, or power outage has occurred.	Reset circuit breaker or replace fuse. Do not increase fuse capacity. If the problem is circuit overload, have it corrected by a qualified electrician.
Dryer shakes or make noise	Some shaking/noise is normal. Dryer may be sitting unevenly.	Move the dryer to an even floor space, of adjust the leveling legs as necessary until it is even.
Clothes take too long to dry	Improper or obstructed duct	Check the Installation Instructions to make sure the dryer venting is correct. Make sure duct is clean, free of kinks and unobstructed. Check to see if outside wall cap operates easily.
	Improper sorting	Separate heavy items from lightweight items (generally, a well-sorted washer load is a well-sorted dryer load).
	Large loads of heavy fabrics (like beach towels)	Large, heavy fabrics contain more moisture and take longer to dry. Separate large, heavy fabrics into smaller loads to speed drying time.
	Controls improperly set	Match the settings to the clothes to dry.
	Lint filter is full	Clean the filter before every load.
	Blown fuses or tripped circuit breaker	Replace fuses or reset circuit breakers. Since most dryers use 2 fuses/breakers, ensure both are operating.
	Overloading/combining loads	Do not put more than one wash load in the dryer at a time.
The dry level wa chosen, but load is still damp	Load consists of a mixture of heavy and light fabrics	When combining heavy and light fabrics in a load, select Extra dry level.
	Lint filter is blocked	Check and clean the lint filter.
	Dry sensor is dirty	Clean the sensor with a moist cloth.
Control button(s) not responding	Child lock activated	This is normal, press the button for 5 seconds to release.
	The option is incompatible with the desired dry cycle.	This is normal, select the right options for your dry cycle.
Remaining time changed to a lower or a greater number	The estimated time may change when dry a smaller, or bigger load than normal load.	This is normal.
Dryer doesn't heat	Fuse is blown/circuit breaker is tripped	Check the fuse/circuit breaker, and replace fuse or reset breaker.

Problem	Possible Causes	Solutions
Clothes are still wet and dryer shut off after a short time	The door was opened before the end of dry cycle, then the load was removed, and a new wet clothes were loaded without selecting a new cycle	A new dry cycle must be selected for each new load.
	Load was already dry except for collars and waistbands	Choose Quick Dry or Time Dry to dry damp collars and waistbands. In the future, when drying a load with collars and waistbands, choose Extra.
Clothes are wrinkled	Over drying	Select a shorter drying time. Remove items while they still hold a slight amount of moisture. Select a Damp setting.
	Items sit in dryer after cycle ends	Remove items when cycle ends and fold or hang immediately.
	Overloading	Separate large loads into smaller ones.
Clothes shrink	Some fabrics will naturally shrink when washed. Others can be safely washed, but will shrink in the dryer.	To avoid shrinkage, follow garment care labels exactly. Some items may be pressed back into shape after drying. If you are concerned about shrinkage in a particular item, do not machine wash or tumble dry it.
Greasy spots on clothes	Drying dirty items with clean ones	Use your dryer to dry only clean items. Dirty items can stain clean items and the dryer.
	Clothes were not completely clean	Sometimes stains which cannot be seen when the clothes are wet appear after drying. Use proper washing programs before drying.
Lint on clothes	Lint filter is full	Clean lint screen before each load.
Static occurs	Synthetics, permanent press and blends can cause static	Try a fabric softener.
	Over drying	Try a fabric softener. Select Damp dry level.

Error Codes

Information codes may be displayed to help you understand better what is wrong with your dryer.

Error Codes	Problem	Solutions
E-1	Door is open	Close the door well.
	Door switch failure	Check the wiring connections between door switch and the Electronic Module. Replace a new door switch.
E-2	Dry sensor failure	Check the wiring connections between dry sensor and the Electronic Module. Replace a new dry sensor.
E-5	Dry heating failure	Clean the lint filter at exhaust outlet. Push down the button of thermostat.
E-7	Drum does not rotate	Belt has fallen off or broken. Replace belt.

If Error Codes display that are other than the ones listed in the table, please contact Customer Service.